VOL. 15 NOTES FROM THE SHOP NO. 91

Woodsmith®

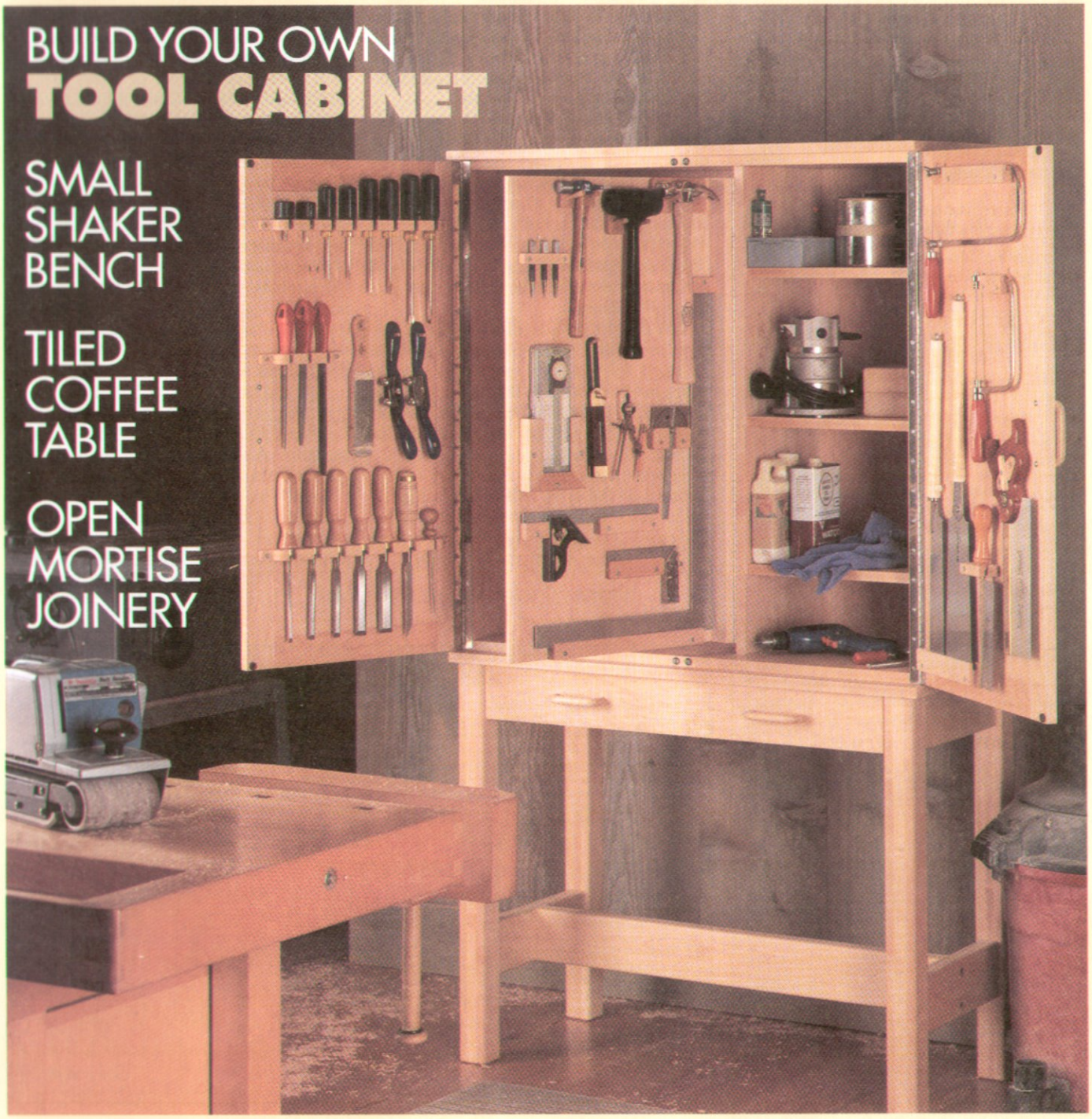

BUILD YOUR OWN
TOOL CABINET

SMALL SHAKER BENCH

TILED COFFEE TABLE

OPEN MORTISE JOINERY

No. 91 February, 1994

Woodsmith®

Editor Donald B. Peschke
Managing Editor Douglas L. Hicks
Assistant Editors James M. Dolan, Philip A. Totten, Jonathan Garbison

Creative Director Ted Kralicek
Art Director Rod Stoakes
Senior Illustrators David Kreyling, Cinda Shambaugh
Illustrators Dirk Ver Steeg, Mark Higdon
Photographer Crayola England
Electronic Graphics Chris Glowacki
Design Director Ken Munkel
Senior Designers Jan Hale Svec, Kent Welsh
Shop Manager Steve Curtis
Shop Asst./Facilities Steve Johnson

Circulation Director Liz Bredeson
Subscription Manager Sandy Baum
Circulation Analyst Rod Cain
Newsstand Sales Kent A. Buckton

PUBLISHING SERVICES

Assoc. Editor: Gordon Gaippe • *Sr. Graphic Artist:* Robert H. Whitmer • *Graphic Artist:* Cheryl L. Cynor

CORPORATE SERVICES

Controller: Robin Hutchinson • *Account.:* Laura Thomas • *Bookkeep.:* Julie Greenlee • *Prod. Mgr:* Carol Quijano • *Info. Serv. Mgr.:* Joyce Moore • *Elect. Pub. Coord.:* Douglas M. Lidster • *Applic. Specialist:* Linda Morrow • *Admin. Assists.:* Cheryl A. Scott, Julia Fish • *Recept.:* Jeanne Johnson • *Build. Maint.:* Ken Griffith

WOODSMITH MAIL ORDER

Marketing Dir.: Robert Murry • *Art Dir.:* Cindy Jackson • *Fulfillment Mgr.:* Valerie Wiese • *Catalog Prod. Mgr.:* Bob Baker • *Proj. Supplies:* Linda Jones • *Tech. Support:* Jeff Janes • *Recept.:* Cynthia Kerman

CUSTOMER SERVICE

Supr.: Jennie Enos • *Cust. Serv. Reps.:* Jennifer Murphy, Joy Johnson, Sara Kono, Ami Blanshan, Anna Cox, Stephanie Hagen, Kristi Andrews, Tammy Aldini

SHIPPING DEPARTMENT

Supr.: Jerry Carson • *Fulfillment:* Gloria Sheehan, Donnie McVey, Chuck Carlson, Sylvia Carey

WOODSMITH STORE

Manager: Dave Larson • *Assistant Manager:* Paul Schneider • *Sales Staff:* Wendell Stone, Dominic Bazzocco • *Office Manager:* Vicki Edwards

Woodsmith® (ISSN 0164-4114) is published bimonthly (Feb., Apr., June, Aug., Oct., Dec.) by Woodsmith Corp., 2200 Grand, Des Moines, IA 50312.
Woodsmith® is a registered trademark of Woodsmith Corp. Copyright© 1994 Woodsmith Corporation. All rights reserved.
Subscriptions: Single copy: $3.95. One year subscription (6 issues), $19.95. Two years (12 issues), $35.95. (Canada/Foreign add $5 per year, U.S. funds.)
Second Class Postage Paid at Des Moines, IA and at additional offices.
Postmaster: Send change of address to *Woodsmith*, Box 10718, Des Moines, IA 50350.
Subscription Questions? Call **1-800-333-5075**, 8:00 am to 5:00 pm, Central Time, weekdays.
PRINTED IN U.S.A.

EDITOR'S COLUMN

Sawdust

From time to time subscribers drop by our shop to see what new projects we've been working on. They also want to see the projects that have appeared in past issues of *Woodsmith*. Especially the ones they've built (or are planning to build).

This often leads to an interesting discussion about changes they've made to a project to fit their needs. But sometimes they want to know why our projects look a little bit different than their versions.

In the articles in *Woodsmith* I try to talk about some of the smaller details in the projects. But it seems there are always some things that just don't get mentioned.

I got to thinking about some of these smaller details recently and decided to write them down. (See the article called "Working Notes" on page 22.) It's sort of the untold story behind the projects you see in *Woodsmith*.

NEW FEATURES. You might notice a few new things in this issue. First of all, we've changed the typeface (print style) we're using for the words in the drawings. (We refer to these words as "callouts.") The old typeface for the callouts seemed to be a little difficult to read.

So we've selected a typeface that I think is easier on the eyes. (It's called Frutiger.) We're also using it for captions under drawings. Try using this issue in your shop and let me know what you think.

READER JIG. I'm also setting aside a page to highlight a practical jig built by a reader. Building a jig is one thing, using it is another. So we'll always include some information on using the reader's jig as well.

If you've designed a jig you find useful, send us a description and, if possible, pictures. (For more information, see page 25.) And don't worry — we don't expect you to be a professional writer or artist. Just jot down your ideas, we'll take it from there.

TALKING SHOP. The last new thing isn't really new at all. It's a popular old department we haven't featured in over a year, "Talking Shop." But it's changed a little.

In each issue we'll organize it around one or two areas that woodworkers want to know more about: finishing, safety, new products, and wood. And, of course, there will often be space for an interesting question from a reader and a practical answer from our shop. If you've got any questions, send them to "Talking Shop," *Woodsmith*, 2200 Grand Ave., Des Moines, IA 50312.

NEW FACES. We're starting 1994 with a few new faces as well. Tammy Aldini has become a full-time customer service representative. And Cynthia Kerman has joined our mail order staff as a receptionist.

Carol Quijano is our new production manager. She has the task of making sure we are on schedule and the issue is printed on time. No problem. Right, Carol?

STATEMENT OF OWNERSHIP, MANAGEMENT AND CIRCULATION
(Required by 39 U.S.C. 3685)

1. Title of Publication: Woodsmith. 1a. Publication No.: 0164-4114. 2. Date of Filing: September 22, 1993. 3. Frequency of issue: Bimonthly. 3a. No. of issues published annually: 6 (six). 3b. Annual subscription price: $19.95. 4. Complete mailing address of known office of publication: 2200 Grand Avenue, Des Moines, (Polk County), Iowa 50312-5306. 5. Complete mailing address of the headquarters of general business offices of the publisher: 2200 Grand Avenue, Des Moines, Iowa 50312-5306. 6. Full names and complete mailing address of publisher, editor, and managing editor: Publisher and Editor: Donald B. Peschke, 2200 Grand Avenue, Des Moines, Iowa 50312; Managing Editor: Douglas L. Hicks, 2200 Grand Avenue, Des Moines, Iowa 50312. 7. Owner: Woodsmith Corporation, 2200 Grand Avenue, Des Moines, Iowa 50312; Donald B. Peschke, 2200 Grand Avenue, Des Moines, Iowa 50312. 8. Known bondholders, mortgagees, and other security holders owning 1 percent or more of total amount of bonds, mortgages or other securities: None. 9. (Does not apply.) 10. Extent and nature of circulation:

	Average no. copies each issue during preceding 12 months	Average no. copies of single issue published nearest to filing date
A. Total no. copies printed (net press run)	429,000	447,000
B. Paid and/or requested circulation:		
1. Sales through dealers, street vendors and counter sales	21,341	33,332
2. Mail subscriptions (paid and/or requested)	375,035	389,448
C. Total paid and/or requested circulation	396,376	422,780
D. Free distribution by mail, carrier or other means, samples, complimentary, and other free copies	209	112
E. Total distribution	396,585	422,892
F. Copies not distributed		
1. Office use, left over, unaccounted, spoiled after printing	11,645	17,612
2. Returns from news agents	20,770	6,496
G. Total	429,000	447,000

11. I certify that the statements made by me above are correct and complete.
(signed) Donald B. Peschke, Editor

A LOOK INSIDE

Contents

Tips & Techniques 4 *Nine great tips submitted by readers and tested in the Woodsmith shop.*

Tool Cabinet 6 *Running short of space for storing hand and power tools? This Tool Cabinet provides plenty of room for both.*

Tool Hangers 13 *Customized hangers for four common hand tools.*

Open Mortise Joint 14 *A new technique for cutting an old joint. Both parts of the joint — the mortise and the tenon — are cut on the table saw. No drilling or chiseling required.*

Shop Notes 16 *Five tips we developed while building the projects for this issue.*

Small Shaker Bench 18 *Even small projects have some challenges. For this Small Shaker Bench, the biggest challenge was finding one perfect board to cut all the parts from.*

Working Notes 22 *Some thoughts on how to achieve better results when planning and building a woodworking project.*

Talking Shop 24 *1) Noise in the shop — power tool decibel levels and hearing protectors. 2) Why does end grain burn when it's cut or routed? And, how can burning be avoided?*

Reader's Jig 25 *Build subscriber Jim Mitchell's jig, and make your plate joiner easier to use.*

Tiled Coffee Table 26 *Detailed plans for combining ceramic tile with a wood frame in a sturdy table. Also, special instructions on laying the tile.*

Sources 31 *Hardware and supplies needed for the projects in this issue.*

Tool Cabinet *page 6*

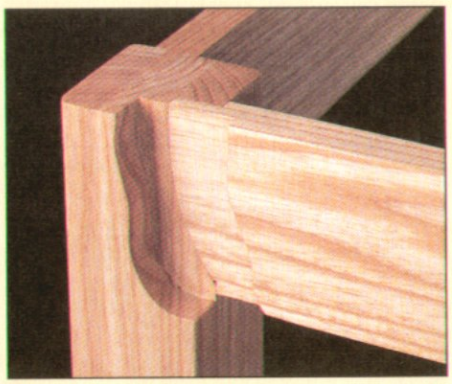

Open Mortise Joint *page 14*

Small Shaker Bench *page 18*

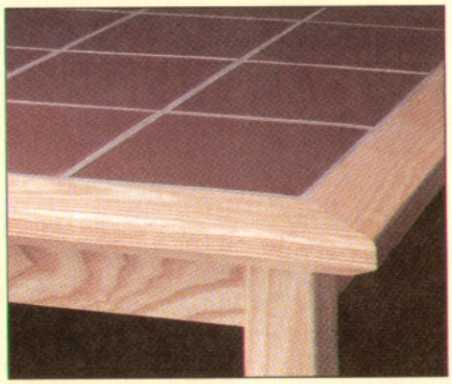

Tiled Coffee Table *page 26*

Tips & Techniques

IN-FEED SUPPORT

■ On my table saw there isn't much table top in front of the blade to support a workpiece. This makes it difficult to rip long boards. To beef up the top, I made an in-feed support that bolts to the fence, see Drawing.

To make the support, I started with a 4"-tall fence extension. Then to extend the table top, I screwed an 8"-wide support board to the bottom edge of the extension.

Now when ripping longer boards, I have a wider table top to rest the workpiece on. And a longer rip fence that helps me guide the workpiece.

Benson A. Bowditch
Conway, Massachusetts

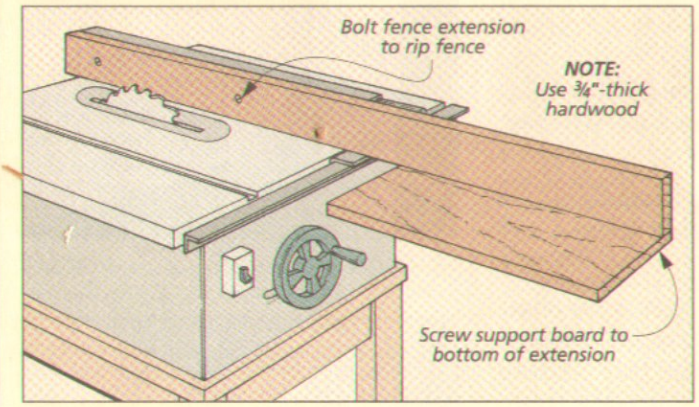

"STRETCHING" A ROUTER TABLE

■ Recently, I had to rout a dovetail groove near the center of a large panel. But the fence on my router table couldn't be moved far enough away from the bit.

Rather than build an extension table, I relocated the fence across one of the corners of the top, see Drawing below.

This allowed me to "stretch" the distance between the bit and fence from 12" to 19". (The distance on your table may vary.)

The only drawback to this was that I wasn't able to use the clamping mechanism built into my fence. But a couple of C-clamps worked just fine.

Nick Osa
Loomis, California

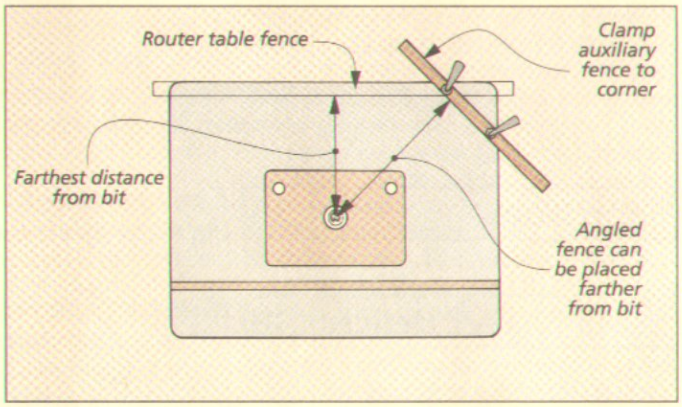

SQUARING UP A GLUED-UP PANEL

■ It's not much of a problem squaring up two parallel sides of a glued-up panel. But squaring up the ragged ends can be difficult *and* dangerous if done on the table saw. Here's how I do it using my hand-held router.

First, I clamp a large framing square flush with the front edge of my workbench, see Fig. 1. Next, I butt the panel up against the square, and align the cut line laid out on the panel with the edge of the bench.

Once the panel is clamped in place, remove the square (leaving the square in place could be potentially dangerous). Then square up the panel with a flush trim bit, see Fig. 2. The edge of the bench acts as the straight edge to guide the bearing.

Leonard Vadorsky
Philadelphia, Pennsylvania

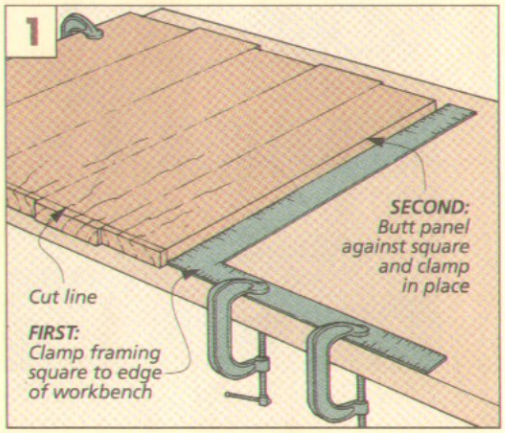

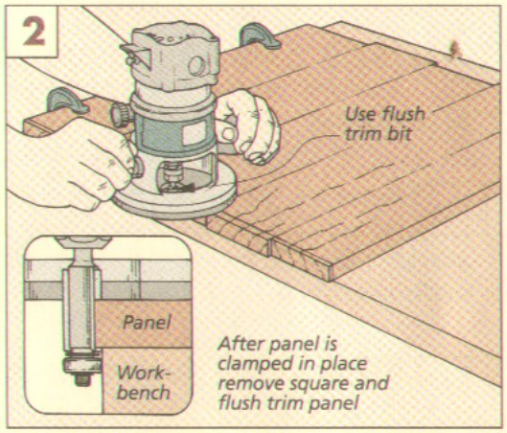

BLOW-OUT

To make sure the collet on my router holds the bit tight, I blow the sawdust out of the collet before installing the bit. But rather than stick my head down to blow out the dust, I use a ball pump, see Photo. A few pumps and the dust is gone. And the dust doesn't blow back in my face.

Chuck Enfield
Brooklyn Park, Minnesota

PUNCHING TIN PANELS

■ To punch the holes in the tin panels for the Jelly Cupboard in *Woodsmith* No. 87, I came up with a better way than using a mallet and an awl.

What I ended up doing was using the drill press and an 8d finishing nail, see Drawing below.

First, cut off the head of the nail and then chuck the nail in the drill press. Next, set the drill press to a depth that produces the proper sized hole (test this setting on the edge of the tin).

With the power to the drill press *off*, line up the nail with the pattern and lower the quill to punch the tin.

It took me about 30 minutes to complete each panel. But best of all, it was easier than swinging a mallet all afternoon.

Ed Hannan
Blakesburg, Iowa

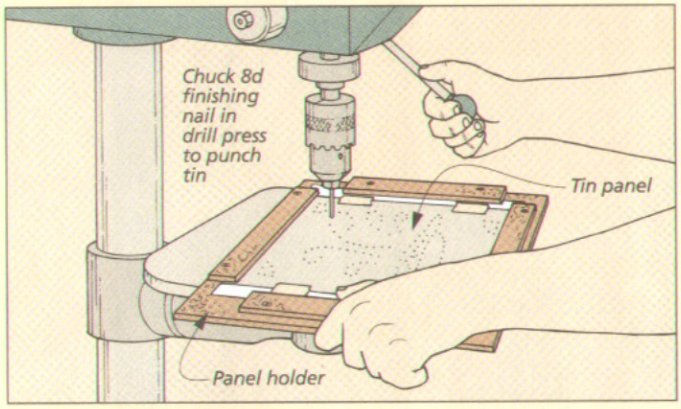

BUFFING DRUM

■ I like to buff my finishes between coats with an abrasive pad. But when buffing smaller pieces, I find it difficult holding the part in one hand and the pad in the other. To free myself from the pad I made a buffing drum for the drill press, see Photo.

The drum consists of a 5"-long hex head bolt and three toy wooden wheels, see Drawing. Then I glued a length of abrasive pad around the wheels.

With the drum holding the pad, I'm now able to hold smaller workpieces with both hands.

Jim Tite
Fayetteville, Arkansas

This shop-made buffing drum is great for small parts.

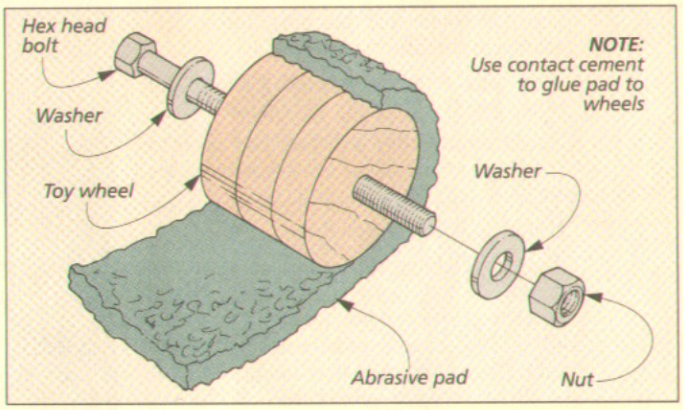

CLIP CLAMPS

■ Occasionally I come up short of spring clamps when repairing veneer or clamping small pieces together. So when I'm in a "pinch" for additional clamps, I use binder clips to hold the parts together, see Drawing.

The nice thing about binder clips is they have quite a bit of tension behind them. And they come in many different sizes. But best of all, they don't cost much. (When comparing a dozen binder clips to the cost of a single, small spring clamp there's no comparison.)

At a local office supply store, I paid around $5 for a dozen 2"-wide binder clips and $2 for a dozen 1¼"-wide clips.

Doug Sherwin
Clearfield, Utah

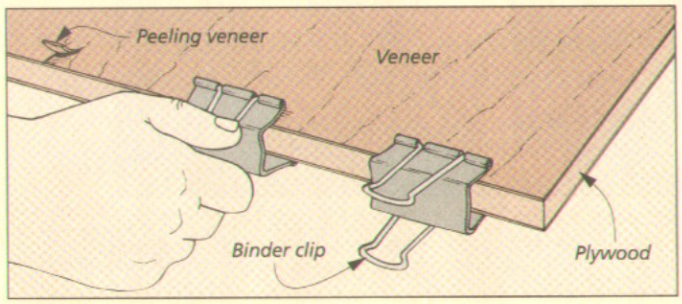

QUICK TIPS

A BIT GREASY

■ Before flush trimming a plastic laminated surface, I first coat the bearing on the flush trim bit with Vaseline. This prevents the contact cement and the laminate dust from building up on the bearing. If a bearing becomes caked with cement and dust, the bearing could seize up. And a seized bearing can result in a burned work surface.

Kim Ruzicka
Leadville, Colorado

ERASING ADHESIVE

■ The next time you're having trouble removing adhesive residue left behind by double-sided carpet tape, try rubbing it away with a sanding belt abrasive cleaner (giant gum eraser). The abrasive cleaner "erases" the adhesive quickly, with little effort.

John Michne
Clifton Park, New York

SUBMIT YOUR TIPS

If you would like to share an *original* shop-tested tip, send it to *Woodsmith*, Tips and Techniques, 2200 Grand Avenue, Des Moines, Iowa 50312. Or if it's easier for you, FAX it to us at: 515–282–6741.

If we publish it, we will send you $30 to $100, depending on the published length of the tip. Include a brief explanation and sketch (or photo). And don't worry, we'll rewrite the tip and redraw the art for you. Also, *please* include a daytime phone number.

Tool Cabinet

If your old cabinet is busting at the seams, here's one to consider that offers plenty of storage space.

Like the belt around my waist, my tool cabinet seems to keep shrinking in size. So recently, I decided to build a bigger cabinet — one large enough to hold power tools as well as hand tools.

I designed this Tool Cabinet to have lots of storage potential:

- It's deep enough to hold most portable power tools.
- There's an inner door that doubles the storage space for hanging tools. (It's shown in the photo below.)
- Two sets of shelves (one shallow, the other deep) are totally adjustable.
- The base includes a drawer that pulls all the way out on ball-bearing drawer slides.
- There's even an optional shelf you can add to the base, see photo below.

I used ¾"-thick hard maple to build this cabinet. To make the legs sturdy, I laminated several pieces of solid maple together. And for the case I used maple plywood. (Note: Maple plywood may be hard to find, but birch is a good substitute — it's almost identical in appearance.) I even used ¾"-thick plywood for the back and door panels. This way, I could screw customized tool hangers securely to each of these panels, see page 13.

With just about every square inch used for storage, this Tool Cabinet should last me a while. (Now all I need is a larger belt.)

Inside the cabinet, there's an extra door for hanging tools. It swings open, so both sides are accessible.

To add more storage space to the base, a plywood shelf can be set across the stretcher.

Need a place for your bench-top drill press or grinder? Just build the base. Then add a plywood top.

EXPLODED VIEW

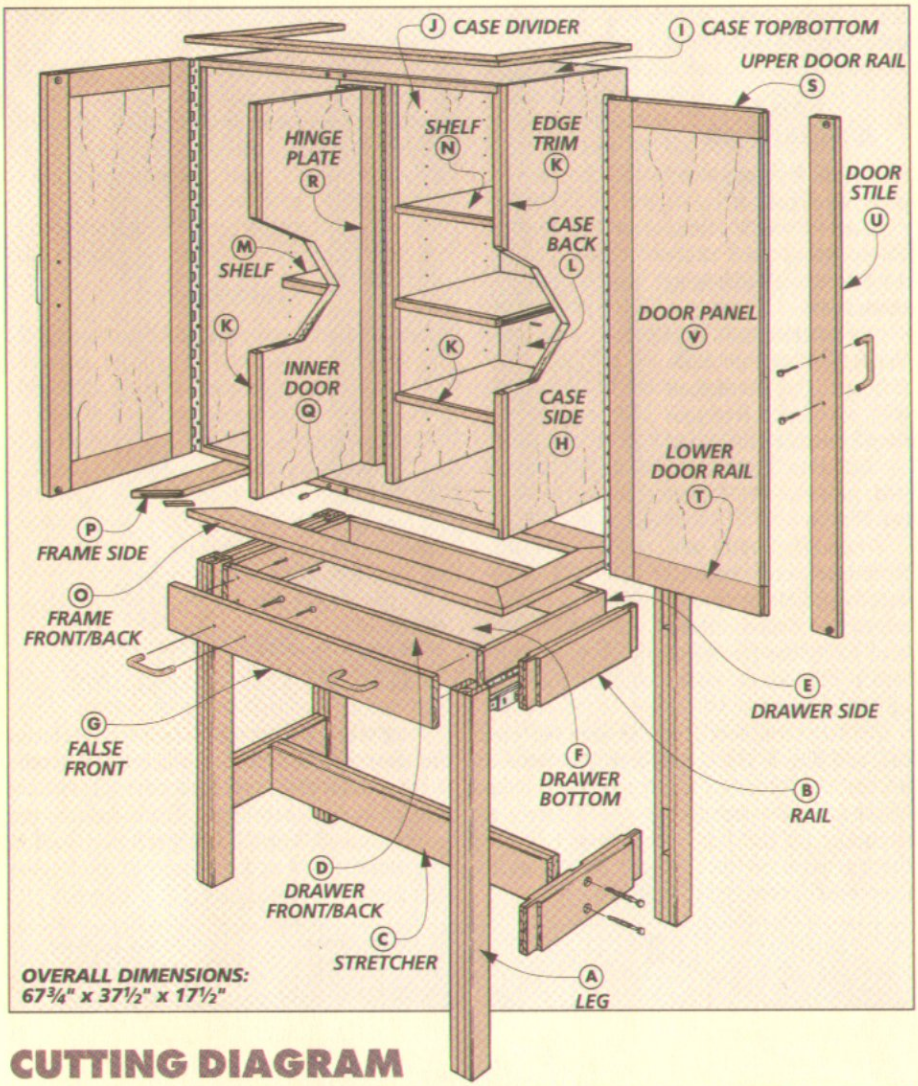

MATERIALS

A	Legs (12)	¾ x 2⅜ - 29½ rgh.
B	Rails (8)	¾ x 4⅛ - 15¾ rgh.
C	Stretchers (2)	¾ x 4⅛ - 33¾ rgh.
D	Drawer Fr./Bk. (2)	¾ x 3⅞ - 30
E	Drawer Sides (2)	¾ x 3⅞ - 16
F	Drawer Btm. (1)	¼ x 14 15/16 - 29 15/16
G	False Front (1)	¾ x 3 15/16 - 31⅞
H	Case Sides (2)	¾ ply - 15 5/16 x 36
I	Case Top/Btm. (2)	¾ ply - 15 5/16 x 36
J	Case Divider (1)	¾ ply - 11¼ x 34½
K	Edge Trim (10)	¾ x ¾ - 36
L	Case Back (1)	¾ ply - 36 x 35½
M	Shelves (L.H.) (4)	¾ ply - 6¾ x 20 3/16
N	Shelves (R.H.) (3)	¾ ply - 11¼ x 13 15/16
O	Frame Fr./Bk. (3)	¾ x 3 - 37½
P	Frame Sides (4)	¾ x 3 - 17½
Q	Inner Door (1)	¾ ply - 17⅝ x 33
R	Hinge Plate (1)	¾ x 4 - 33
S	Upr. Dr. Rails (2)	¾ x 2¼ - 14⅝
T	Lwr. Dr. Rails (2)	¾ x 2¼ - 14⅝
U	Door Stiles (4)	¾ x 2¼ - 36
V	Door Panels (2)	¾ ply - 14½ x 32¼

SUPPLIES

- (4) ¼" x 3½" Lag Screws
- (4) ¼" Flat Washers
- (1) Pair 16" Full-Extension Drawer Slides
- (4) 3¾" Maple D-Handle Wire Pulls
- (17) #8 x 1¾" Fh Woodscrews
- (25) #8 x 1¼" Fh Woodscrews
- (28) 4d Finish Nails
- (1) ¼" Dowel - 28"
- (1) 1½" x 33" Piano Hinge w/Screws
- (2) 1½" x 35⅞" Piano Hinges w/Screws
- (5) Magnetic Barrel Catches w/Plates

CUTTING DIAGRAM

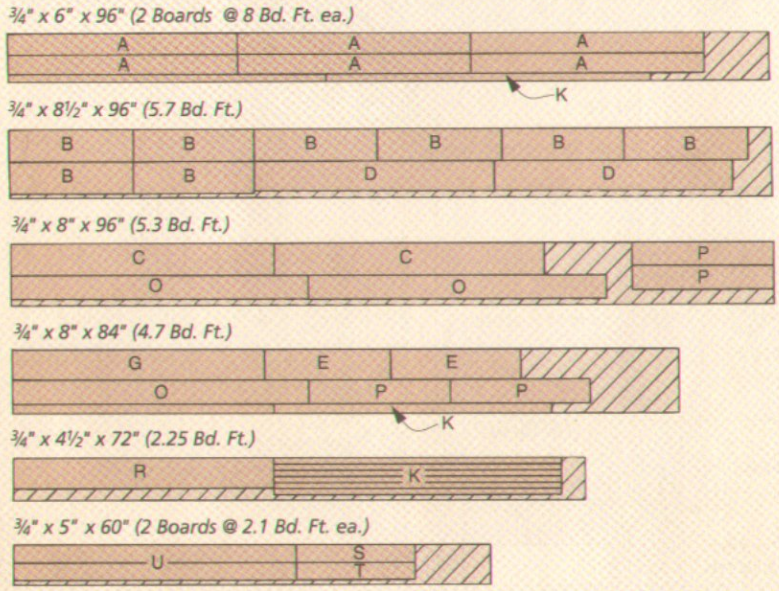

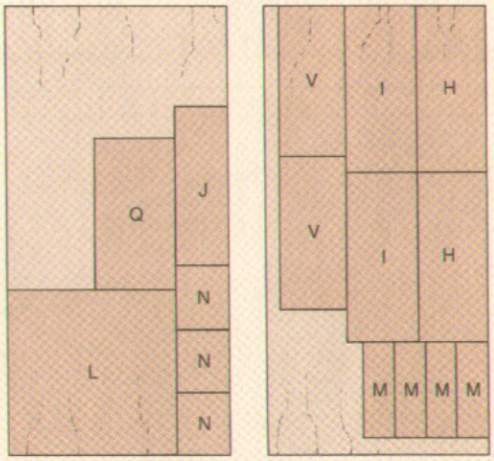

- *(2) 4' x 8' Sheets ¾" plywood*
- *Also need 2' x 4' sheet of ¼" Masonite for Drawer Bottom*

BASE

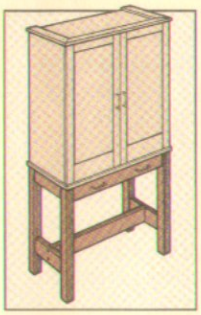

This cabinet has an open base that raises it up off the floor — so your tools are within easy reach. But unlike wall-hung cabinets, it doesn't have to take up wall space.

LEGS

To build the base, I started with the **legs (A).** They're made up of three oversize pieces of ¾"-thick maple, see Fig. 1. (You'll need twelve pieces to make all four legs.)

Each pair of legs is held together by rails, using mortise and tenon joints. But I didn't chop any mortises. There's an easier way.

Instead, I cut a pair of notches in the four middle leg pieces, see Fig. 1. Then when these middle pieces are sandwiched between the outside pieces, the notches automatically form the mortises.

LAMINATE LEGS. When laminating the legs, keep the edges with the mortises as flush as possible. To do this, I clamped these edges face down on my bench before clamping the legs together. (Use waxed paper to protect your bench.) When the legs are dry, rip them to finished width and cut them to length, see Fig. 1.

Now, rout the edges of the legs with a ¼" round-over bit. I also rounded over the bottom ends to prevent the legs from splintering if the cabinet ever gets dragged across the shop floor.

RAILS & STRETCHER

Once the legs are complete, each pair of legs is connected with rails. Then these end units are joined with one long stretcher.

CUT OVERSIZE. Like the legs, the four **rails (B)** and the **stretcher (C)** are cut oversize, then laminated together — but this time from two pieces, not three, see Fig. 2.

When the rails are laminated, cut them to length and clean up one edge. (I waited until later to rip the pieces to width. This let me clean up any chipout.)

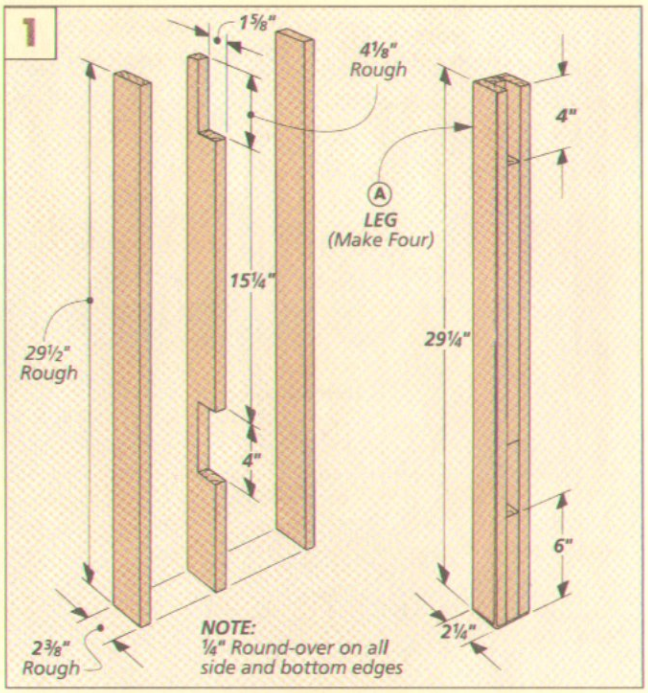

CUT TENONS. Next, cut tenons on each rail, see Fig. 3. Use a test piece to sneak up on the thickness of the tenon until it just slides into the mortise. Note: There's no shoulder on the top and bottom edges of these tenons. So until the rail is cut to width, they won't actually fit into the mortises.

CUT DADOES. Now set aside two pieces for the top rails. Then, on the other two rails I cut a dado centered on the length to hold the stretcher, see Fig. 3. Each dado is cut wide enough to hold the stretcher. And to the same depth as the cheeks of the tenons (so the blade setting stays the same).

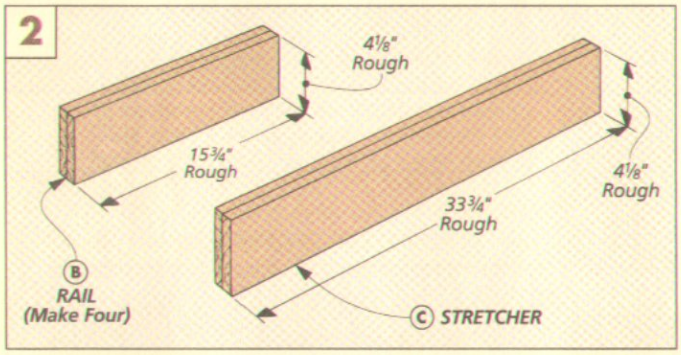

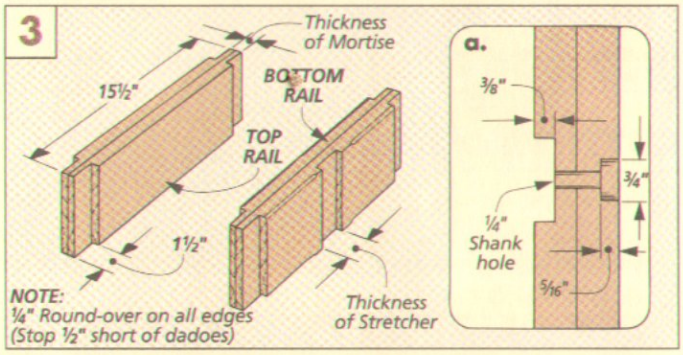

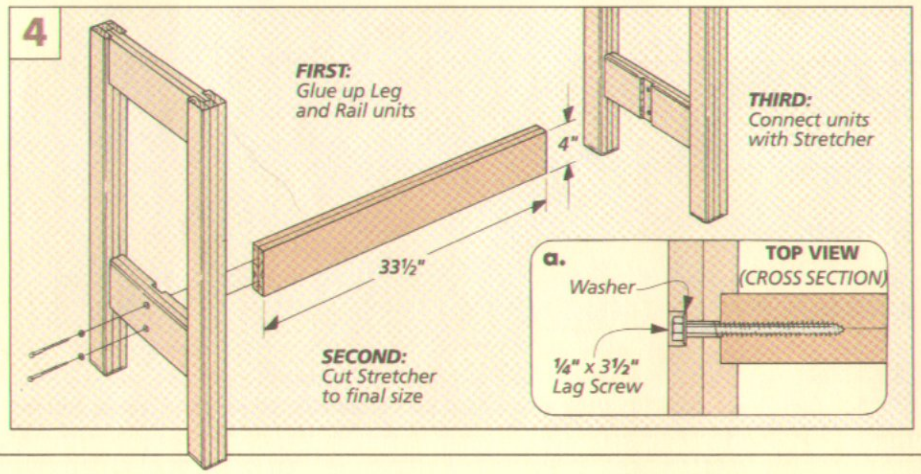

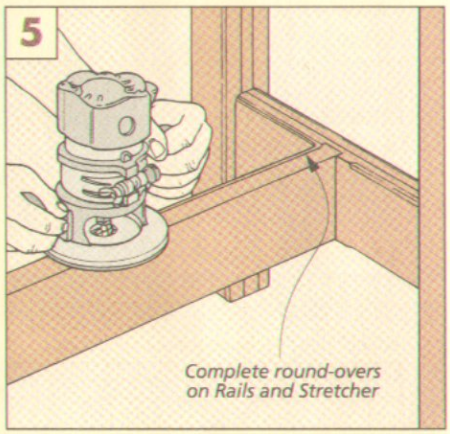

RIP TO SIZE. After cutting a dado on each bottom rail, rip all the rails to width, sneaking up on the final cut until the tenons just fit into the mortises in the legs.

Now, round over the edges of the rails. But stop short of the dadoes on the bottom rails, see Fig. 3. (These round-overs will be completed *after* the base is assembled.)

Before gluing the legs and rails together, I drilled counterbored shank holes through the dadoes in the bottom rails, see Fig. 3a.

ASSEMBLY

When assembling the base, I found it easiest to work in stages. First, glue two legs and two rails together as a unit, see Fig. 4.

While both end units were drying, I cut the stretcher (C) to final length and width. Then I drilled pilot holes and glued and screwed the stretcher between the end units using ¼" lag screws, see Fig. 4a.

Now, using a hand-held router, complete the round-overs on the rails and rout the edges of the stretcher, see Fig. 5.

DRAWER

For more storage space, I added a single, wide drawer between the legs of the base. And to provide full access to what's inside, I mounted it with full-extension drawer slides. (For sources, see page 31.)

CUT TO SIZE. Begin by determining the size of the drawer. For the width, measure between the legs (level with the stretcher) and subtract the thickness of the two drawer slides. For the depth, measure from front to back and subtract 1". (The drawer is inset ¼" and has a ¾"-thick false front.)

Now, cut a **front (D)**, **back (D)**, and two **sides (E)** to size, see Fig. 6. Then cut the **bottom (F)** from ¼"-thick Masonite.

CUT LOCKED RABBET. I used a locked rabbet joint to hold the parts of the drawer together securely. To make this joint, first cut tongues on the ends of the drawer front and back, see Fig. 6a. Then cut mating dadoes in the drawer sides.

Next, to hold the bottom (F), I cut a groove ¼" from the bottom edge of each of the drawer pieces, see Fig. 6b.

Before gluing up the drawer, drill countersunk holes in the front (D) for a false front that's added later, see Figs. 6 and 6a.

INSTALL DRAWER. After the drawer is assembled, mount the drawer slides and install the drawer, see Fig. 7. (It's easier to do this *before* adding the false front.) Note: When mounted, the top of the drawer should be ⅛" *below* the top of the legs.

ADD FALSE FRONT. After the drawer is installed, cut the **false front (G)** to final size, see Fig. 8. To cover the drawer, the false front is 1/16" taller, and it fits between the legs with a 1/16" gap at each side.

Before adding the false front, drill countersunk pilot holes and add the two drawer pulls. And to align the drawer front, I used double-sided carpet tape, see tip above.

FALSE FRONT

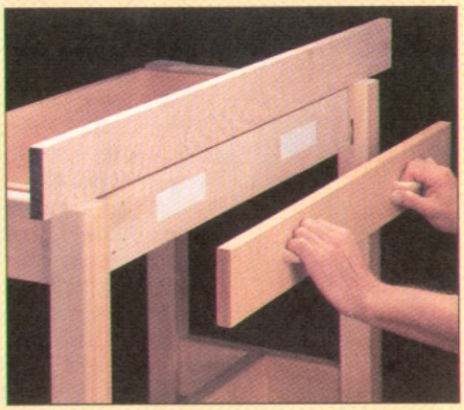

To align a false drawer front, I use double-sided carpet tape. This holds the piece in place while it's screwed to the drawer. A straight-edge set across the legs helps position the false front so there's a uniform gap when the frame is added to the top later.

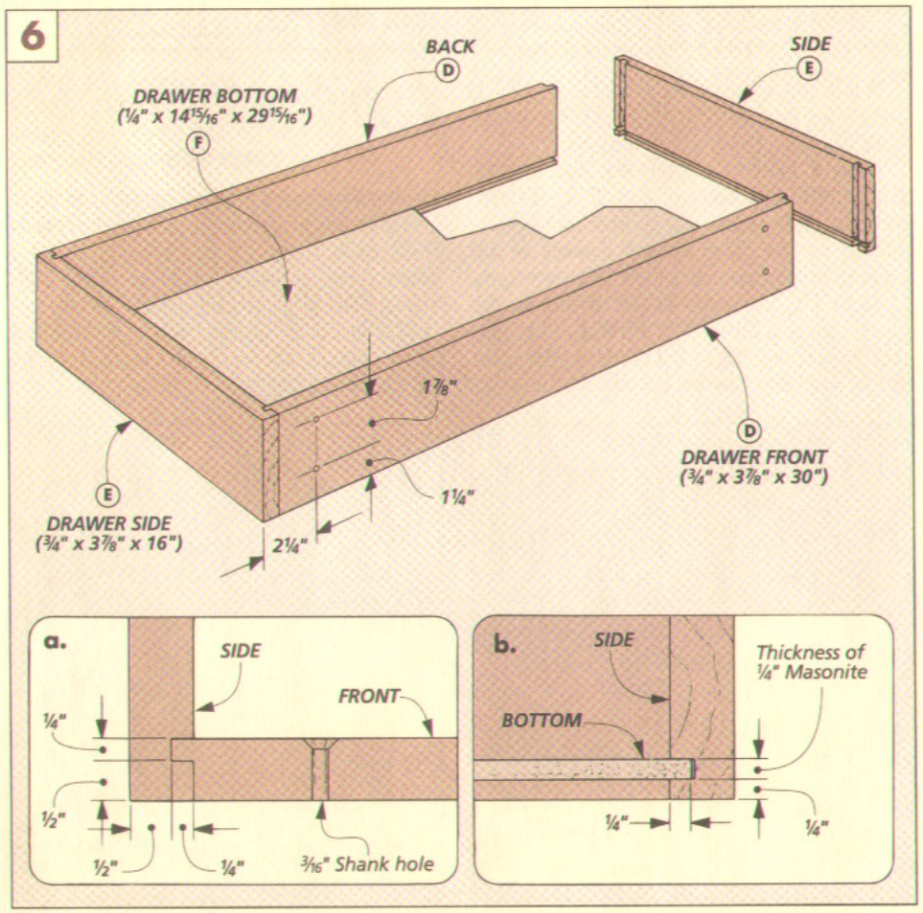

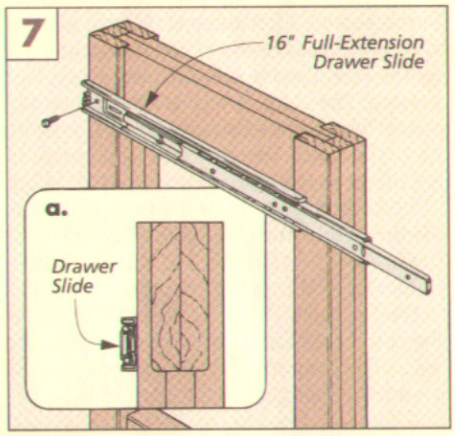

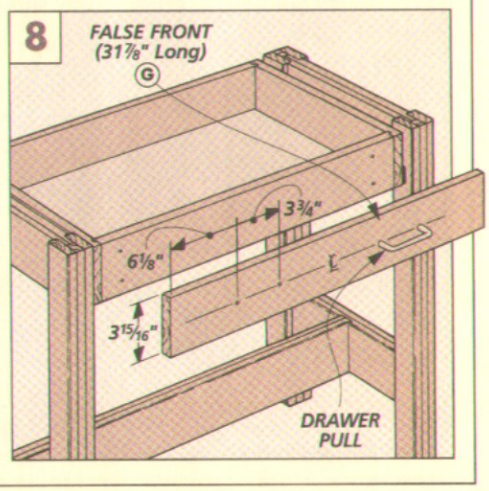

CASE

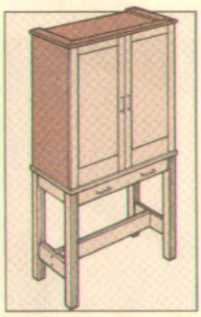

With the base of the cabinet complete, it's time to build the case. The case is simply a square plywood box joined with rabbets. The main requirement was that it be big enough for hand-held power tools — especially a circular saw.

Begin by cutting the **case sides (H)** and **top and bottom (I)** to finished length and width, see Fig. 9. (I made it easy on myself — they're all the same size.) Then rip a **divider (J)** to width. I left this piece a bit long; it will be cut to fit the case after assembly.

ADD EDGING. To hide the edges of the plywood, rip five pieces of **edge trim (K)** to match the thickness of the plywood. Then glue the trim to the front of each piece of plywood, see Fig. 9a.

CUT RABBETS. The case is held together with rabbet joints. To hold the back (L), I cut rabbets in the back edges of all the case pieces except the divider, see Fig. 9b. To hold the top and bottom, I cut rabbets in the sides (H), see Fig. 9c.

DRILL HOLES. I wanted to add adjustable shelves on both sides of the divider. So before assembly, I laid out and drilled holes for shelf pins in each side of the divider and the *inside face* of each side (H), see Fig. 10.

Note: The shelves on the left side are narrower (shallower) than those on the right. Also, the holes on each side of the divider are offset so they won't run into each other.

ASSEMBLE CASE. Now it's time to assemble the case. First, glue and nail the sides to the top and bottom, see Fig. 11. Then cut a **back (L)** to fit into the rabbets.

Design Note: I used ¾"-thick plywood for the case back. This adds support to the case and holds it square. It also lets me securely mount tool hangers to the back of the case.

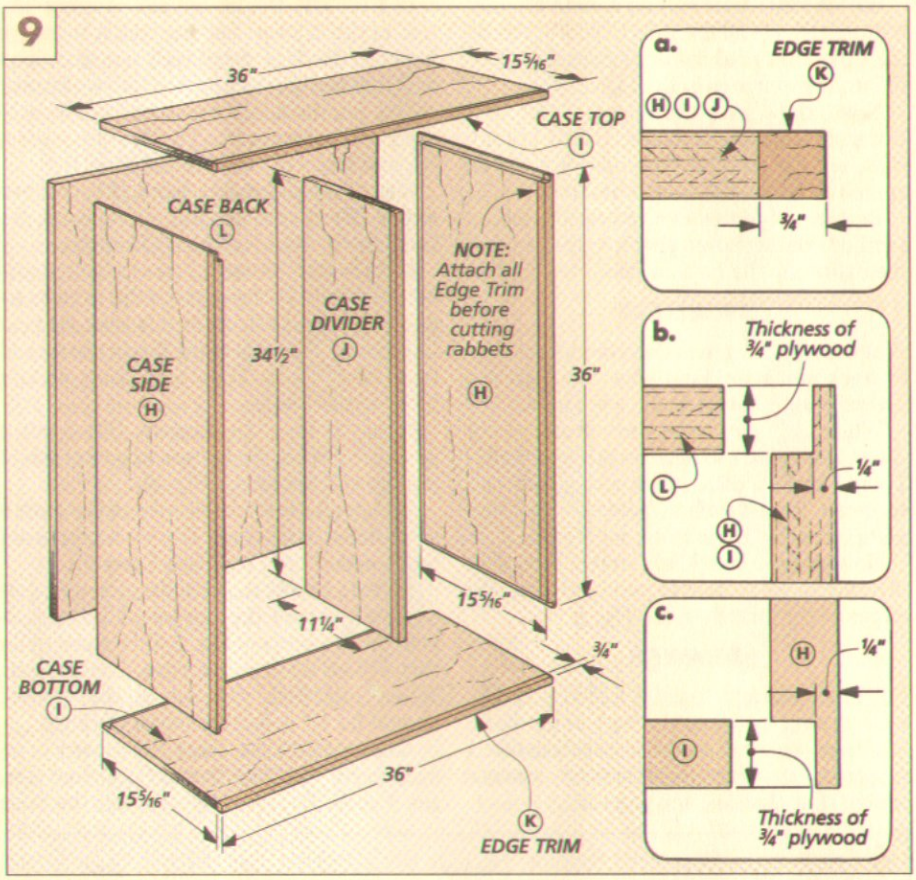

When the back of the case has been glued and nailed in place, the divider (J) can be cut to fit between the top and bottom.

Design Note: I simply screwed the divider to the top, bottom, and back. It could be set in dadoes. But the divider isn't as wide (deep) as the case, so any dadoes would have to be stopped short of the front edges.

Shop Tip: To position the divider in the case, I used a little trick. First, tip the case on its side, see Fig. 11. Then cut four spacers to hold the divider parallel to the sides while you glue and screw it to the top, bottom, and back of the case.

SHELVES

The shelves are a little different than you'd find in most cabinets. They don't just rest *on* shelf pins. Instead, the shelves have a groove cut in each side, so they slide *around* the pins, see Fig. 12b.

Without making the shelves permanent, the grooves hold the shelves in place better than if they were just sitting on pins.

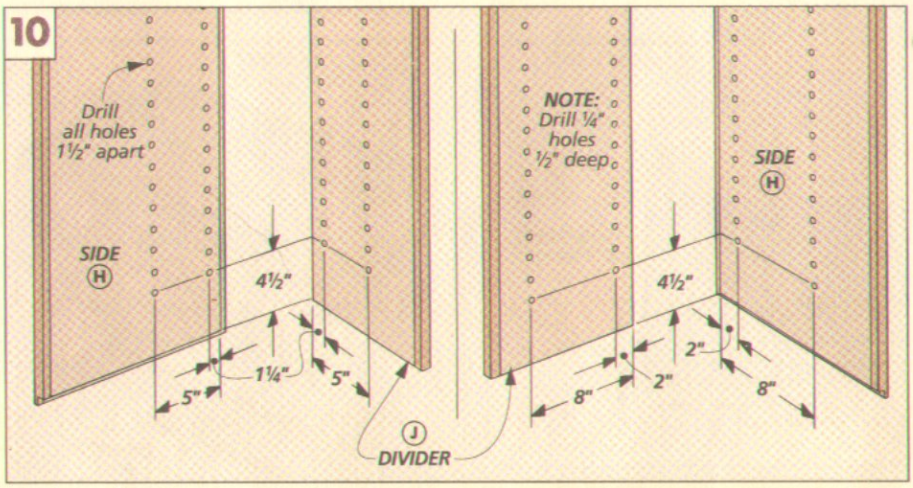

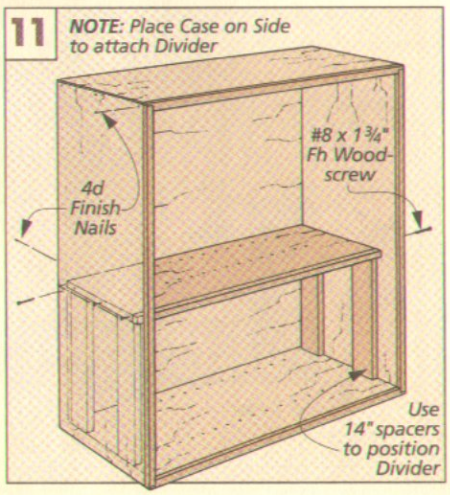

But even though I wanted adjustable shelves, I didn't want them to *look* adjustable. So I cut the grooves *before* adding edge trim to the shelves. The trim covers the plywood and also hides the grooves.

CUT TO SIZE. To begin, cut the **shelves (M, N)** to fit inside the case with a 1/32" gap at each side, see Fig. 12. Next, cut a 1/4" groove along both edges of each shelf to match the 1/4"-dowel shelf pins.

To do this, I adjusted the fence so the blade was slightly off-center on the edge of the piece, see Fig. 12a. Then, after the first pass, I flipped the board around and made a second pass. If the fit over a 1/4" dowel is still a bit tight, adjust the fence and make two more passes.

When the grooves were cut, I added some edge trim (K) to the fronts of the shelves, see Fig. 12. Then to position the shelves, I inserted 3/4"-long dowels into the holes and slid the shelves in place.

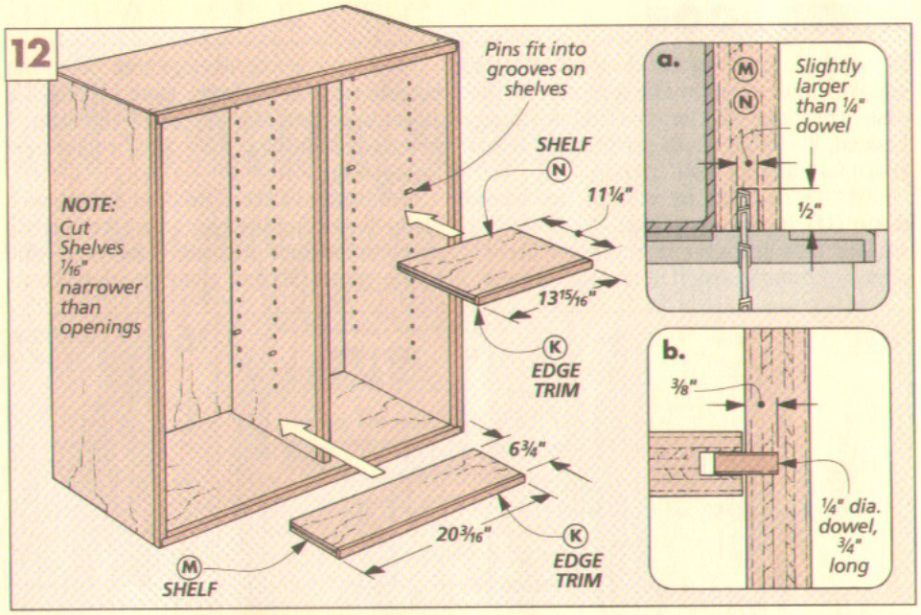

ASSEMBLY

Before adding the doors, I attached the case to the base. The link between these units is a mitered frame. And for a decorative touch, I added a similar frame to the top of the case.

CUT FRAMES. To make the frames, rip three **front/back pieces (O)** and four **sides (P)** to width, see Fig. 13. (There's no back to the frame at the top of the case.)

Now miter the frame pieces to length. The front/back pieces are 1" longer than the width of the base. And the sides are 1/2" longer than the depth of the base. (They're flush with the back of the base.)

SPLINED MITERS. I added the base frame first, see Fig. 13. Here, I wanted to make sure the miters were plenty strong, so I used splines to add strength. (For more on mitered splines, see page 16.)

Now, the base frame can be glued together. When it's dry, soften the front and side edges with a 1/8" round-over bit.

ADD BASE FRAME. The frame is held down to the base and up to the case with countersunk screws, see Fig. 13.

When all the shank holes are drilled, set the frame in place so the back edge is flush with the base and centered side to side, see Fig. 13. Now mark and drill pilot holes and screw the frame to the base.

Then you can do the same to screw the case to the frame. (The case is screwed only to the front and back pieces of the frame.)

ADD CASE FRAME. The frame on top of the case is a bit different from the base frame. First, it doesn't have a back, just a front and two sides, see Fig. 14. Also, these miters didn't have to be as strong, so I didn't use splines. I simply glued and screwed the top frame to the case.

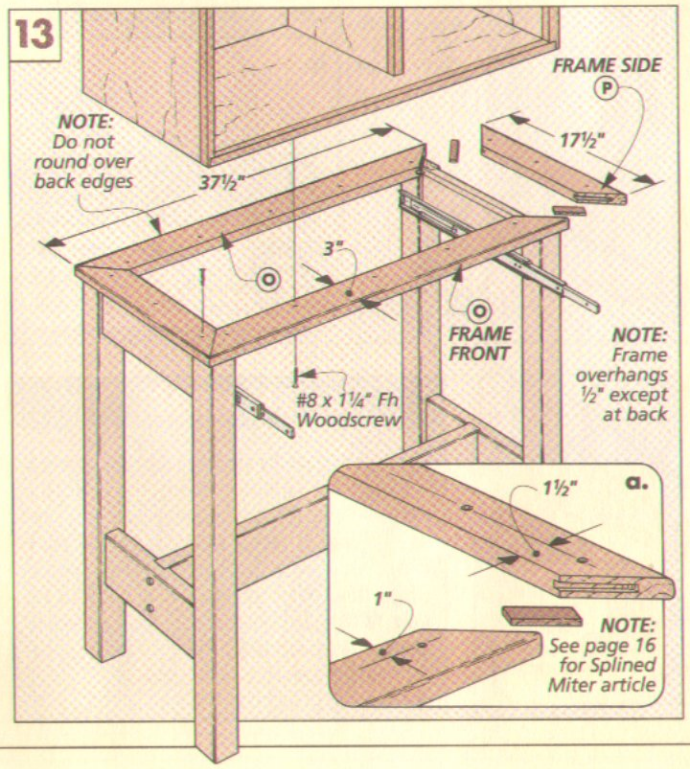

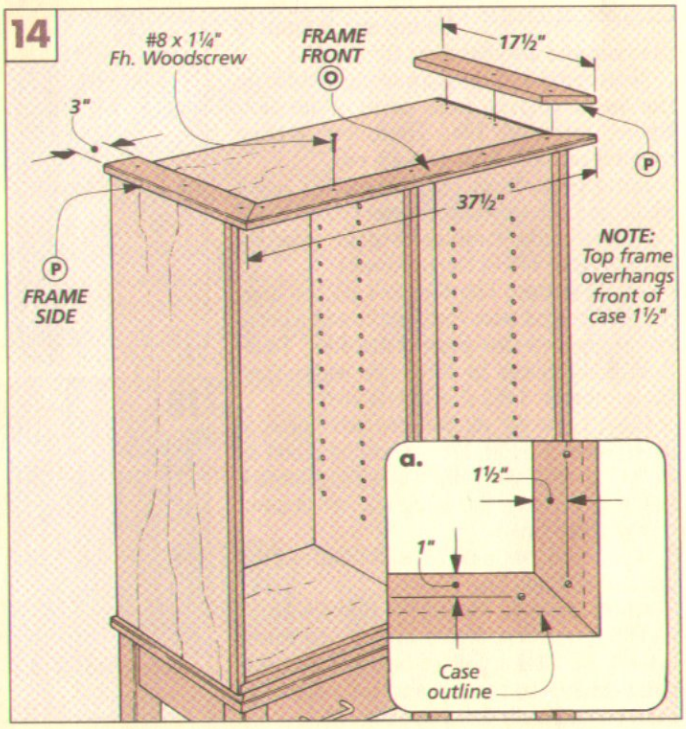

INNER DOOR

Before making the outer doors, I added a smaller inner door to the left side of the case. This door isn't for covering anything. Instead, it swings out to provide additional space for hanging hand tools.

CUT TO SIZE. Start by cutting the **inner door (Q)** to size, see Fig. 15. Note: It's smaller than the case opening, so there's plenty of room to reach in and pull it open.

Next, glue a strip of edge trim (K) to the outside edge of the inner door, see Fig. 15. Then to soften the edges of the trim, I rounded them over with a 3/8" round-over bit, see Fig. 16.

ADD HINGE PLATE. The door swings on a piano hinge. But the hinge isn't screwed directly to the door. Instead, I made a 4"-wide **hinge plate (R)** and glued the door into a groove centered on this plate, see Figs. 15 and 16. This way, the door can be held closed with a barrel-style magnetic catch without interfering with the piano hinge.

MOUNT DOOR. With the hinge plate glued in place, hang the door with the piano hinge, see Fig. 16. Next, drill a pilot hole in the divider and add the magnetic catch. Then screw the strike plate to the hinge plate.

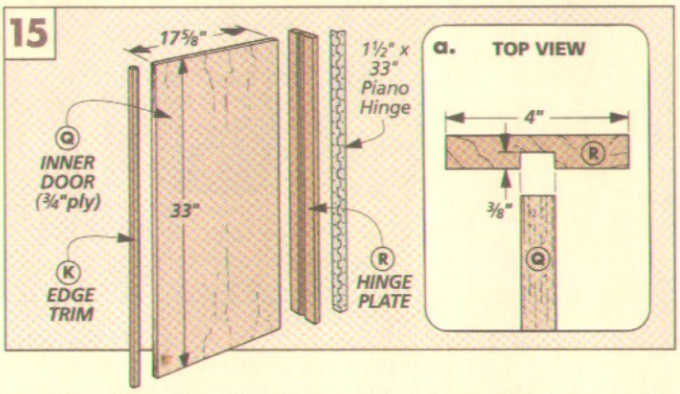

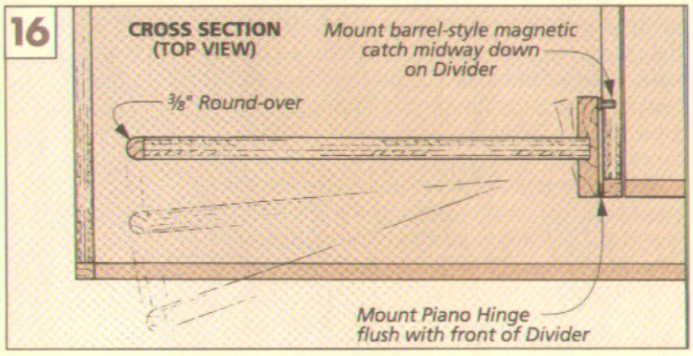

OUTER DOORS

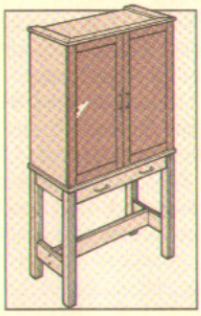

The outer doors are all that's left. These are frame and panel doors built with stub tenon and groove joints.

CUT RAILS & STILES. The first step is to cut the **door rails (S,T)** and **stiles (U)** to size, see Fig. 17. (Note: Allow for a 1/16" gap at the top and bottom of the case and also between the doors.)

Next, cut a 7/16"-deep groove centered on the inside edge of each piece of the door frame, see Fig. 17a. Then, cut mating tongues on both ends of each rail.

ADD PANEL. Now, dry assemble each frame and cut a plywood **panel (V)** to fit, see Fig. 17. (Add 3/8" to all sides of the panel for tongues that will fit the grooves.)

CUT TONGUES. The tongues on the door panels are a bit odd. I wanted to add a decorative groove to the front of the door. To do this, the rabbets in front are wider than those in back. I did this in two steps.

First, I cut 3/8" rabbets on *both* faces of each panel, see Fig. 17b. Then I trimmed an extra 1/16" from the front face only. (Doing it this way reduces the tendency for chipout on the front face.)

Now, the doors can be assembled, and the pulls added, see Fig. 17.

MOUNT DOORS. Mount the doors with piano hinges. Then, finally, to hold the doors closed, I added a pair of barrel-style magnetic catches to the top and bottom of the case behind each door, see Fig. 18.

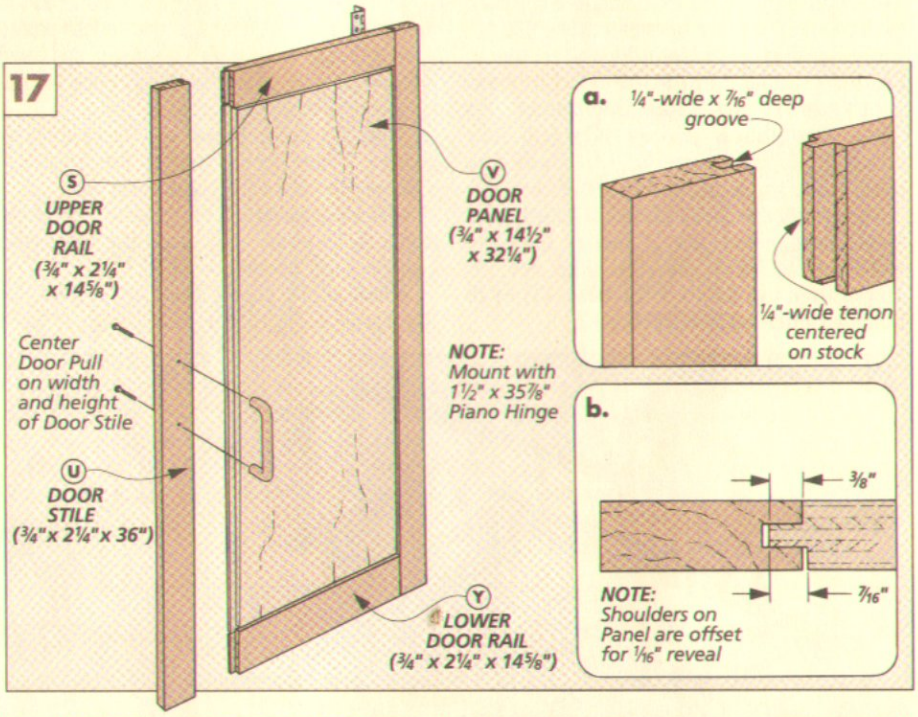

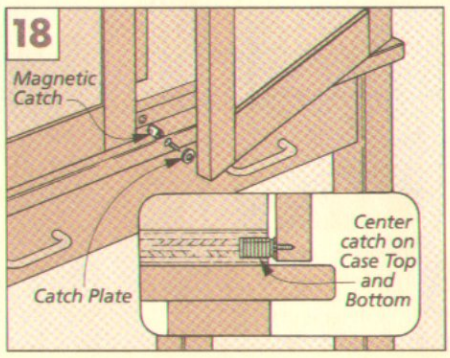

FINISH

To finish shop projects, I usually apply a wiping varnish such as Royal Finish, see page 31 for sources. There are two reasons. First, it's easy to apply — just wipe it on, let it soak in, and wipe off the excess. Also, wiping varnish is easy to repair. If the finish starts to look worn or gets a deep scratch, I just clean the surface and wipe on a fresh coat.

Tool Hangers

With a little ingenuity, a few pieces of scrap can become handy tool hangers. Here are some ideas that will work in any cabinet or on a wall.

HAND SAW

To avoid damaging the teeth on my hand saw, I hang it by its handle. The hanger I made matches the inside of the handle.

To make the hanger, trace the inside of the handle on a piece of scrap that's the same thickness as the handle. Then cut it to shape and sand it smooth.

To keep the saw in place, screw a small wooden turnbutton to the hanger.

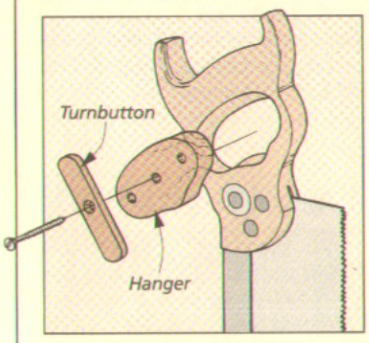

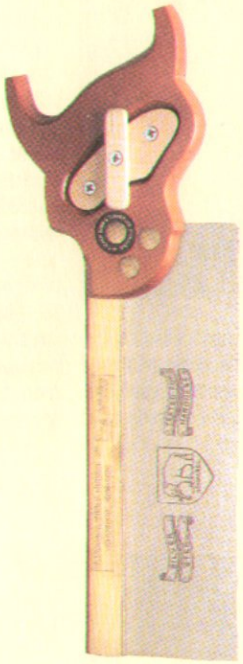

HAMMER

The most convenient way to hang a hammer is to rest the head on two dowels. But rather than mount these dowels directly to the door, I mounted them to a small block of wood that's screwed to the door.

This may sound like an extra step, but there's a good reason for it — it's easier to locate and drill angled holes in a small block than in a large plywood door.

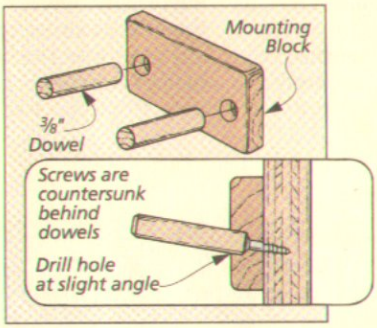

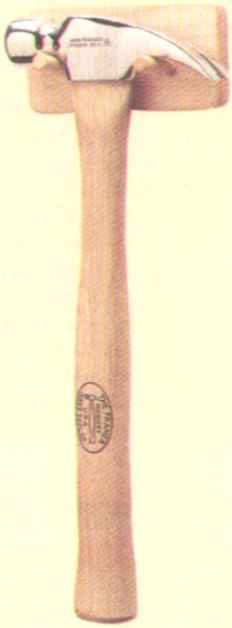

FILES

To store my files, I made a simple rack. The nice thing is the files can't fall out. You have to lift them before they will slide out.

When building the file rack, drill the large holes only 1/4" deep. (With through holes, oval-shaped handles tend to wedge themselves in place.) The slots are started by drilling small through holes. Then remove the waste with a band saw.

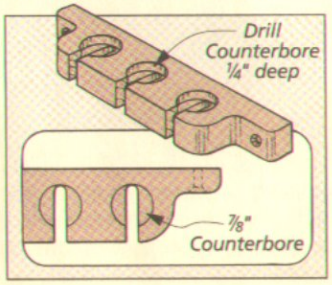

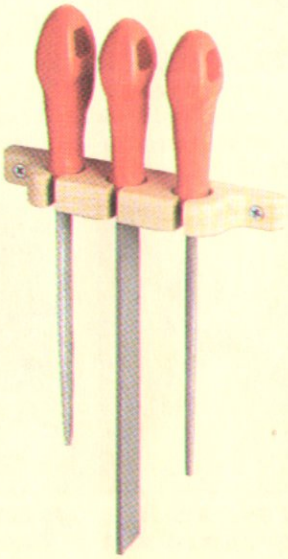

TRY SQUARE

To make a hanger for a try square, I started with a long piece of scrap. (It's easier and safer to work with.)

First, rip a kerf centered on one edge to hold the blade of the square. Then cut the piece to fit the length of the blade. Now, screw it to the cabinet.

To keep the try square from sliding off, I also added a small keeper block behind the handle.

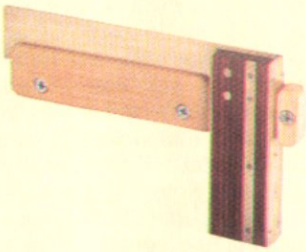

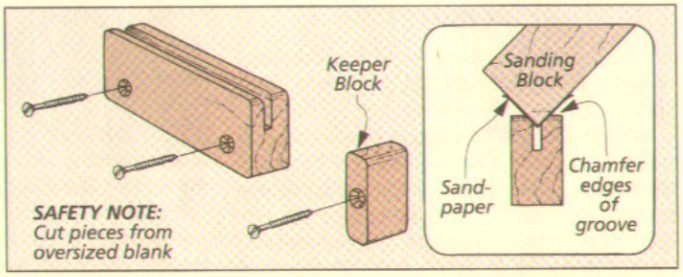

Open Mortise & Tenon

Sometimes you have to change your way of thinking. For instance, when faced with cutting a mortise, I usually think of a drill bit and sharp chisel. That's the way a mortise is traditionally cut. Lay out the mortise, drill between the layout marks, then chop out the waste with a chisel.

When designing the table on page 26, I cut the mortises differently. No drill bit, no chisel, just one pass over a dado blade in the table saw. This produces a mortise with an open top and a *curved* bottom, see photo.

Note: A mortise with an open top is sometimes called a slot mortise. That's because it's more like a slot or a stopped groove than a traditional (fully enclosed) mortise.

An open mortise is a joint that's often used at the top of a leg assembly on a table. Even though there's no top shoulder for the tenon to fit against, that's okay. The table top itself acts as the end of the mortise.

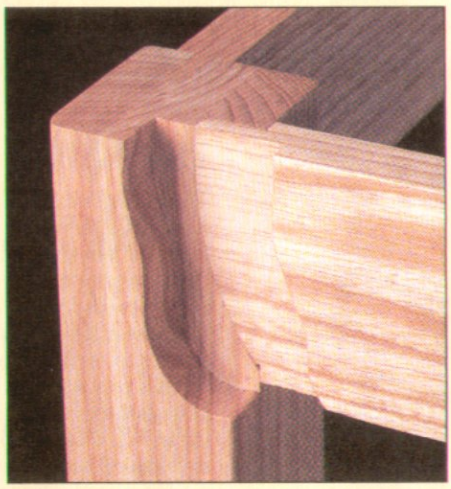

TEST PIECE. As with any mortise and tenon joint, careful layout of the mortise is important. Depth, width, length, and location of the mortise are all critical. So to avoid any error when setting up to cut the mortise in the workpieces, I check the setup by first cutting a mortise on a test piece.

STOP BLOCK. When cutting an open mortise on the table saw, there's one other setup that's needed. This involves using a stop block to control the length of the mortise. As the workpiece is passed over the blade, the extra block "stops" the cut and creates the curved bottom of the mortise.

ROUNDED TENON. Because this open mortise is a little unusual, the tenon that fits the mortise is different, too. But not that different. The tenon is cut in the usual way. (For the table on page 26 I cut the tenons using a dado blade in the table saw.)

After the cheeks of the tenon are cut, the bottom end of the tenon is shaped to fit the curved part of the mortise. (Refer to Curved Tenons on the facing page.)

This last step of rounding the bottom end of the tenon can be omitted if you prefer to square off the curved (bottom) end of the mortise. But for this project, I decided to give my mortise chisel a rest.

OPEN MORTISES

Even though an open mortise is cut differently than a traditional mortise, it starts out much the same. The first thing to do is lay out the mortise on the workpiece.

LAY OUT MORTISES

For a project like the table on page 26, all four legs are connected with aprons. This means there will be eight mortises — two on each leg. So the layout is especially important. Not only does an accurate layout help you get the correct dimensions (length, width, and depth) of the mortise, but just as important, it ensures the mortises are cut in the correct *location*.

Design Note: The mortises for the legs of the Tiled Coffee Table on page 26 aren't centered on the legs — they're offset. And the mortises should be located on the *inside* faces of each leg, see Step 1.

SET UP TABLE SAW

After marking the location of the mortises on each workpiece, the table saw dado blade and rip fence can be set up, see Step 2.

STOP BLOCK. When the saw is set up just right, I cut a stop block to limit the length of the mortise. The stop block is just a piece of scrap wood with a groove ripped on one face, see Step 3. (Rip the groove without changing the table saw setup.) The groove

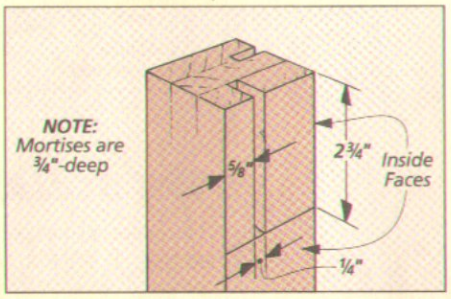

1 *To cut offset mortises on a leg, the mortises must be laid out in advance. Mark the length, depth, and width of the mortise, plus the distance to the edge of the workpiece.*

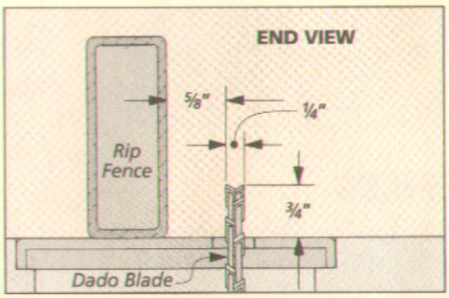

2 *Next, adjust the height of the dado blade and the position of the rip fence. For the Tiled Coffee Table on page 26, the mortises are cut ¼" wide and ¾" deep.*

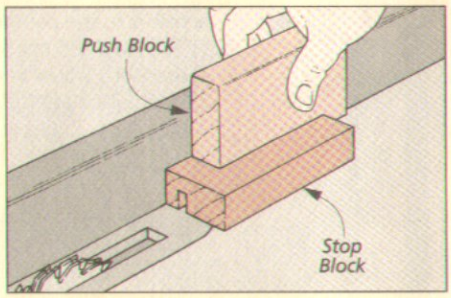

3 *When the blade and fence are set up, make a stop block from a piece of scrap the same width as the actual workpiece. To make the cut safely, use a push block.*

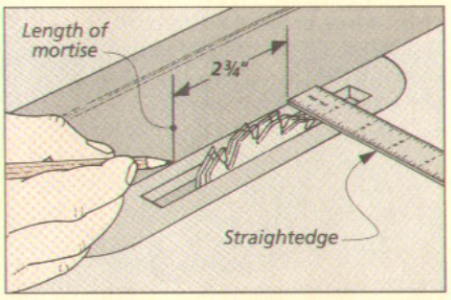

4 *After the blade and fence are set up, the length of the mortise can be set. Measure from front of blade and draw a line on the rip fence the desired length of the mortise.*

allows the block to straddle the saw blade.

Now the stop block can be clamped to the rip fence. To do this, first measure from the point on the saw table where the front tooth of the blade disappears. Then draw a line on the rip fence to indicate the desired length of the mortise, see Step 4.

Shop Note: This pencil line will make it easy to reposition the block later on — for the second cut on each piece.

CUT THE MORTISES

Cutting the mortises is now just a matter of pushing the workpiece into the blade until it runs into the stop, see Step 5. Then turn off the saw and lift the piece off the table.

Note: When cutting offset mortises, only one mortise can be cut on each leg using this first setup.

CHANGE SETUP. To cut the second mortise, the rip fence needs to be moved, see Step 6. To do this, the stop block needs to be unclamped, turned around, and reclamped to the rip fence.

Note: Move the fence and lock it in place when the groove in the stop block fits over the blade, see Detail in Step 6. Then clamp the block in place with the front end aligned to the pencil mark on the fence.

Now roll the workpiece 90° and cut the second mortise just as you did the first.

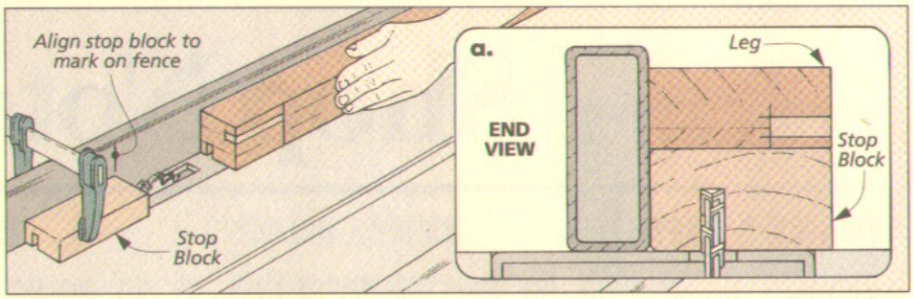

5 *Now the stop block can be clamped to the fence with the front end aligned to the pencil mark. (The groove will straddle the saw blade.) Then cut one mortise on the first leg. When the leg hits the stop block, turn off the saw and lift the workpiece from the table. To cut the first mortise on each of the remaining legs, repeat the procedure.*

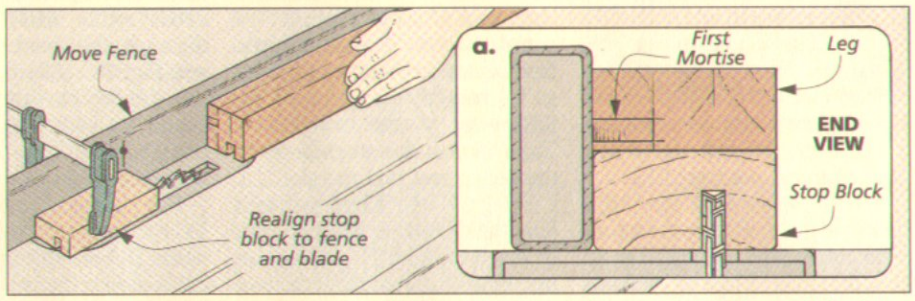

6 *To cut the second mortise on each leg, the fence and stop block must be repositioned. To do this, unclamp the stop block and turn it around. Then move the fence so the groove fits over the blade. Lock the fence in place and clamp the block to the fence at the pencil line. Then roll the leg 90° from the first mortise and make the second cut.*

CURVED TENONS

For the best-fitting tenon, I always start with a test piece that's the same width and thickness as the piece that's actually tenoned. Then I sneak up on the setting, see Step 1.

SHOULDER CUTS. To establish the shoulders of the tenon, I make one cut on each face of the workpiece, see Detail 1 in Step 1. Then I slide the workpiece away from the fence and make a series of cuts (on each face) to complete the tenon, see Detail 2.

CUT RADIUS. Next, shape the lower corner of the tenon, see Step 3. But to match the radius perfectly, first make a template from a piece of cardboard, see Step 2. Then trace this shape to the cheek of each tenon.

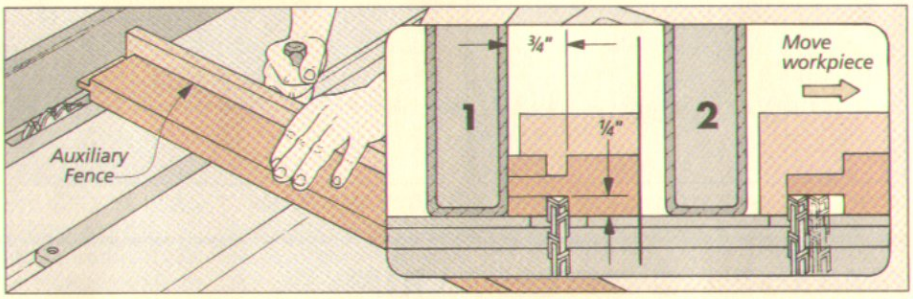

1 *The tenons are also cut using the table saw and dado blade. To prevent chipout, first attach an auxiliary fence to the miter gauge. Then position the rip fence to cut the tenon to the desired length. Now adjust height of the blade and make one pass on each face to cut the shoulders. Complete the tenon by making several more passes.*

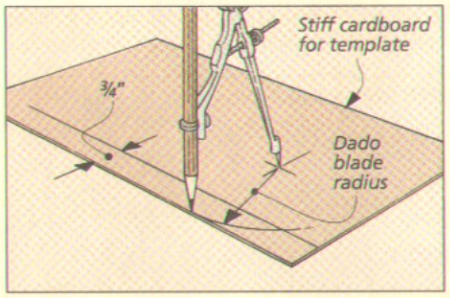

2 *A template helps lay out the curve for cutting the curved tenon. Start with an oversize piece of cardboard and strike an arc the same radius as the dado blade.*

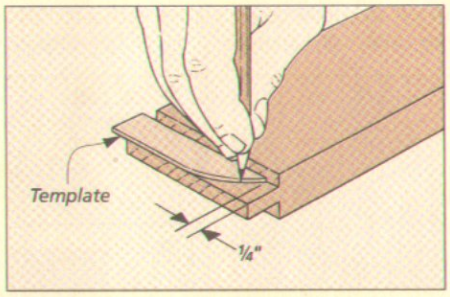

3 *Trim the template to match the length of tenon, then place it on the cheek of the tenon. Position the curved end of the template ¼" from the end of the tenon.*

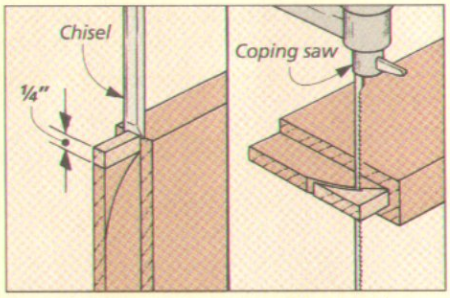

4 *After tracing the shape of the template on the tenon, make a chisel cut at the bottom of the tenon. Then use a coping saw to cut the tenon to the curved shape of the mortise.*

Shop Notes

SPLINED MITERS

■ Mitered corners look good, but they're not very strong. To reinforce the mitered frame used in the Tool Cabinet, I added splines (refer to page 11).

PLATE JOINER. The quickest and easiest way to add splines is with a plate joiner (using biscuits), see Fig. 1 and photo.

SLOT CUTTER. But if you don't have a plate joiner, a router and a slot cutter bit will also work. (For sources, see page 31.)

When using a slot cutter bit, I usually cut the slots with a hand-held router, see Fig. 2. To do this, first make a mark 1½" from the toe of each mitered end. (This prevents the bit from cutting through the front corner of the frame.) Also, to ensure that the slots in the pieces align, mark the top face of each and always rout with that face up.

ROUT SLOTS. To rout the slots, first adjust the height of the bit so it's roughly centered on the thickness of the workpiece. Then clamp the workpiece to the bench and rout the slot.

Safety Note: When using a hand-held router, always rout from left-to-right. This means on one end of the workpiece, you will rout from the heel of the miter to the mark, see Fig. 2a. On the other end, you'll have to make a plunge cut and rout back through the heel, see Fig. 2b. (Align the center of the router bit with the mark when stopping or plunging.)

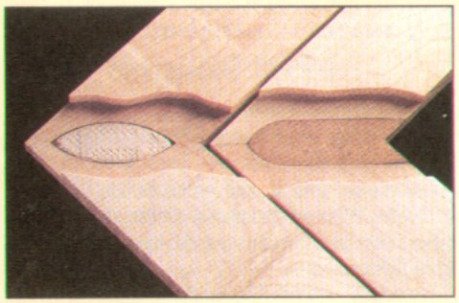

A biscuit (left) or a spline (right) can be added to strengthen a miter joint.

For splines, I use Masonite. (A hardwood spline will also work. But for strength, run the grain *across* the joint line.)

First cut the splines to width. Then round the corners for a better fit, see photo above. Trim the splines after the glue dries.

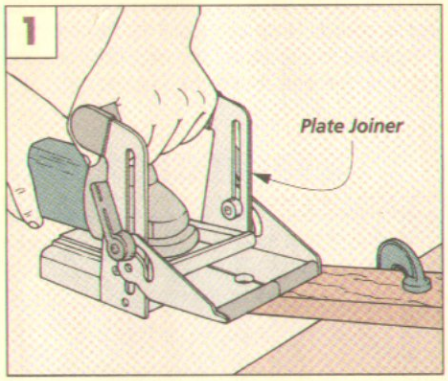

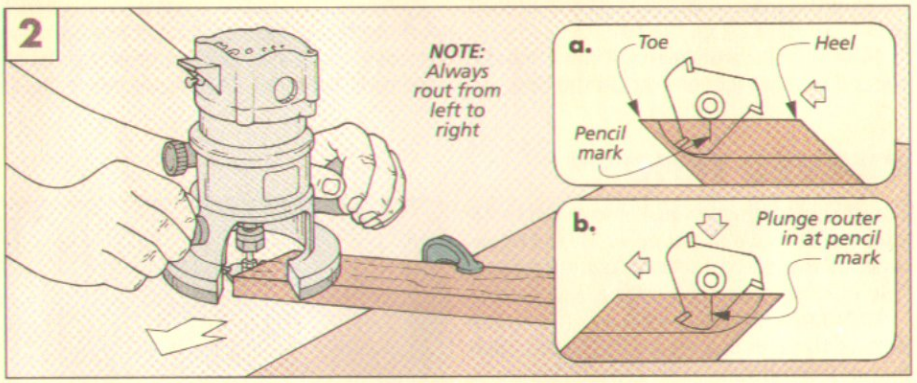

MEASURING MITERED TRIM

■ The trick to making a mitered frame fit around a square panel is knowing the *exact* length to cut the pieces. On the Tiled Coffee Table (page 26), each frame piece has a groove that hides the corners, see Fig. 2a. But there's a way to find their lengths without any measuring.

To find the lengths of the pieces, I drew diagonal lines from corner-to-corner across the plywood panel, see Fig. 1. (Note: In order for the lines to be *exactly* 45°, the panel must be perfectly square. This tip won't work with a rectangular table.)

Now, cut a miter on one end of the frame piece. Then simply align this mitered end with one of the diagonal lines. Extend the other diagonal line to the other end of the piece, and it's ready to be cut to length, see Fig. 2.

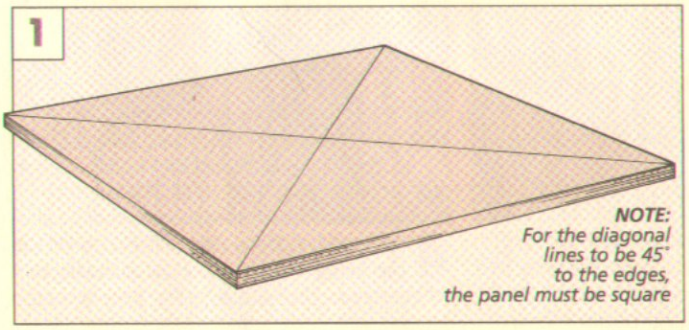

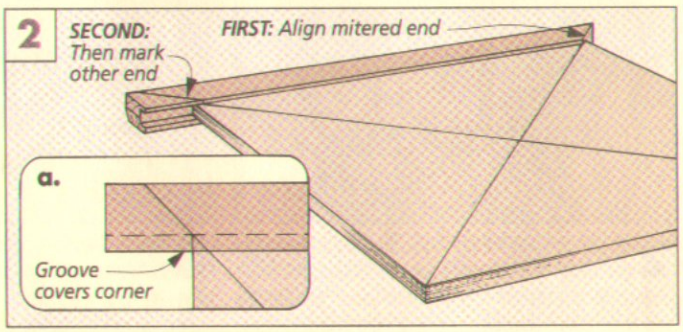

CLEANING OUT DADOES

■ Whether you use a single blade or a dado blade, a dado or groove usually doesn't have a perfectly flat bottom — it ends up a little ragged.

Most of the time, this isn't a problem. But when the dado is exposed on the end of a workpiece, as on the Small Shaker Bench on page 18, I like to make sure the dadoes look clean.

SANDING BLOCK. To do this, I use a simple sanding block, see Fig. 1. Its thickness is a hair less than the width of the dado.

I stick adhesive-backed sandpaper to one edge of the block. Then trim the sandpaper so it doesn't fold around the edges (or it could widen the dado).

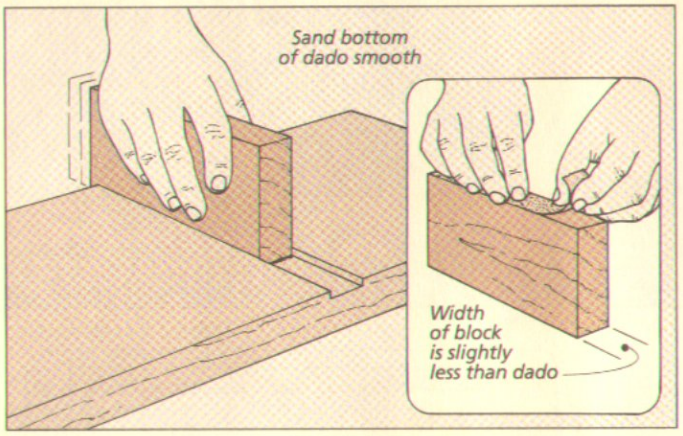

GLUE LINES

■ When cutting tapers on laminated stock, the taper shouldn't cut across a glue line if at all possible, see Fig. 1.

Cutting across a glue line will expose the line on the face of the workpiece, see Fig. 2. This horizontal line will look wider than a typical glue line (because it's cut at an angle). Plus, if you try to stain the workpiece, the glue won't accept the stain.

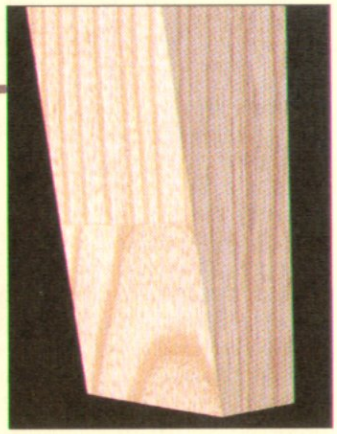

When tapering laminated stock, don't cut across the glue line.

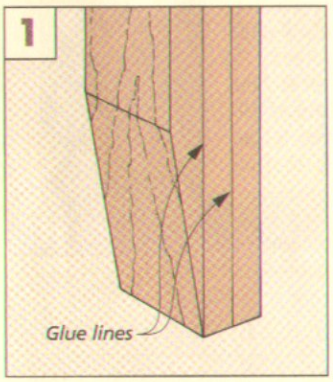

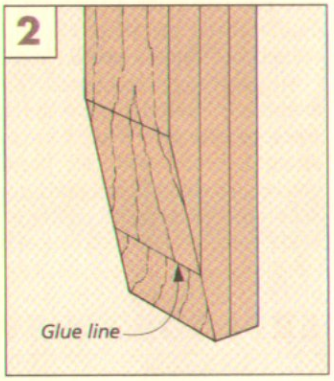

MEASURING STICK

■ For the Small Shaker Bench on page 18, I needed to find the length of the stretcher that fits between the legs. But each leg has a shallow groove to hold the stretcher, so I had to measure between the grooves. And with a tape measure, it's hard to get an accurate measurement.

FOLDING RULE. A folding rule with a sliding extension works well when you need an inside measurement. Only they're not as common as they used to be.

MEASURING STICK. But there is another way. A simple shop-made measuring stick will do the job. And you won't even need to bother with numbers.

To find the length of the stretcher, I overlapped two narrow pieces of scrap so they were seated in the groove in each leg, see Fig. 1. Then I clamped these two pieces together.

Now, this measuring stick can be used to transfer the length directly to the piece, see Fig. 2.

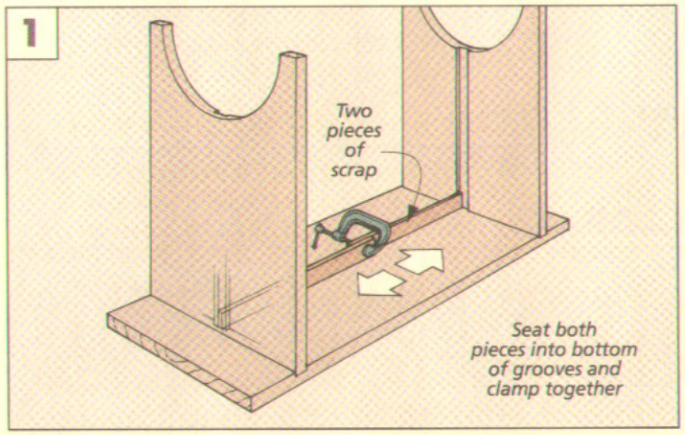

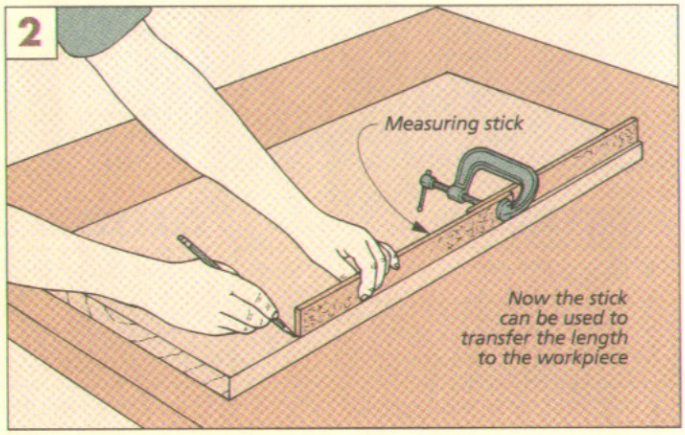

Small Shaker Bench

Probably the biggest challenge to building this Small Shaker Bench was finding the right piece of wood. I wanted to build the bench from one fairly clear, perfectly flat 1x12 pine board. (A 1x12 is actually ¾" thick and 11¼" wide.) There were a number of reasons for this.

First, I wanted the color of all the pieces to match. Second, I wanted the grain pattern to wrap from leg-to-leg, over the top of the seat. But most of all, I wanted a flat board, because I knew it would be easier to join flat pieces together tightly.

PERSISTENCE. After spending about 15 minutes at my local lumberyard sorting for that *one* particular board, the yard worker finally asked me what I was doing. I said something about a needle in a haystack.

He said the perfect board didn't exist. But eventually I found it (near the bottom of the stack of course). What I found was a flat, straight board with no banding marks, gouges, or sawmill ink marks.

You just have to be persistent. But most of all, your lumberyard has to be patient.

EXPLODED VIEW

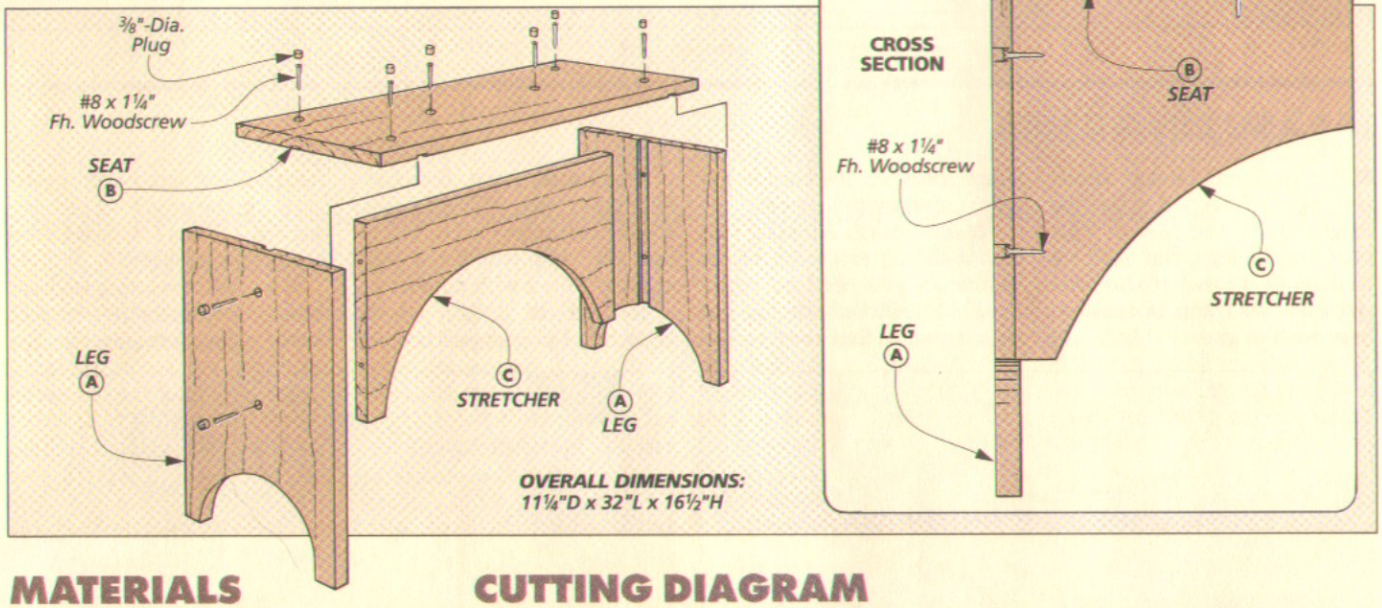

MATERIALS

A	Legs (2)	¾ x 11¼ - 15⅞
B	Seat (1)	¾ x 11¼ - 32
C	Stretcher (1)	¾ x 11¼ - 24¾

SUPPLIES

- (10) ⅜"-dia. Wood Plugs
- (10) #8 x 1¼" Fh Woodscrews

CUTTING DIAGRAM

¾" x 11¼"- 96" (8.0 Bd. Ft.)

NOTE: *Cutting diagram laid out so grain pattern wraps over top of stool*

LEGS & SEAT

The nice thing about this project is it only has four parts — two arched legs, a seat, and an arched stretcher. To build the Bench, I started with the legs.

LEGS. To make the **legs (A)**, first cut two blanks to finished length, see Fig. 1. (You don't have to rip any of the workpieces to width if you started with a 1x12.)

Now cut a ⅛"-deep groove centered along the inside face of each leg to accept the stretcher, see Fig. 2 in Box below.

To form feet on the legs, lay out and cut an arc at the bottom of each leg, see Fig. 2. After cutting the arcs with a sabre saw, I sanded the curved edges smooth. A quick way to do this is to use a drum sander mounted in the drill press, see Fig. 3.

SEAT. With the legs complete, the next step is to make the **seat (B)**. First, cut the seat to finished length, see Fig. 4.

Now, cut a ⅛"-deep dado at each end of the workpiece to accept the legs, see Box below. (The difference between a groove and a dado is that a groove runs *with* the grain, a dado runs *across* the grain.)

Once the dadoes are cut, the next step is to make the stretcher (see the next page).

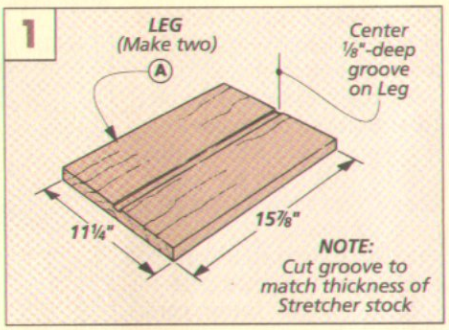

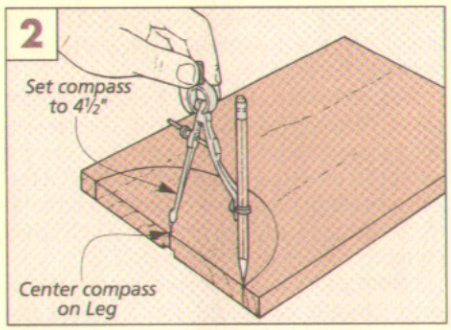

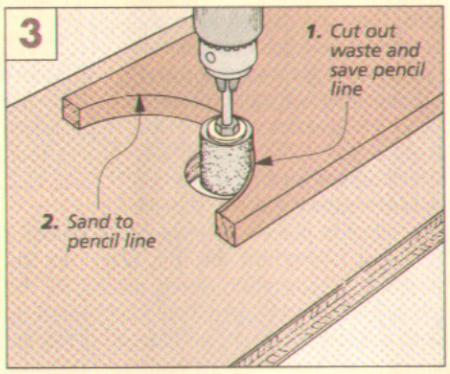

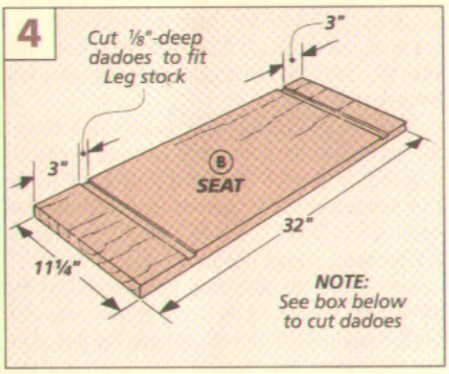

PERFECT FITTING GROOVES & DADOES

A groove or a dado can be cut anywhere on a workpiece. Sometimes it's centered in the middle of the piece, sometimes it's not. And the approach to take will be different, depending on where the cut is to be made.

But no matter where the cut is placed, the trick to making the joint fit is to "sneak up" on the width until it's just right.

What I mean by sneaking up is making the cut in multiple passes — moving the fence *slightly* between passes.

NOT CENTERED. To cut a groove or dado that's *not* centered, first adjust the rip fence so the outside edge of the blade aligns with one side of the desired cut, see Fig. 1. Then make the first pass.

Next, move the rip fence so the other side of the saw blade is near the opposite side of the dado. Make the second pass. Now, if necessary, sneak up on the cut until it's the desired width.

CENTERED. If the joint is to be centered, there's a method for doing this automatically. First, mark the centerline, see Fig. 2.

Now, position the fence so the mark on the workpiece is slightly off-center, over the blade. Then make the first pass.

To complete the cut, flip the workpiece end-for-end and make the second pass. Now the joint is centered. But, it may not be the exact *width*. So move the fence slightly and repeat this procedure until it's perfect.

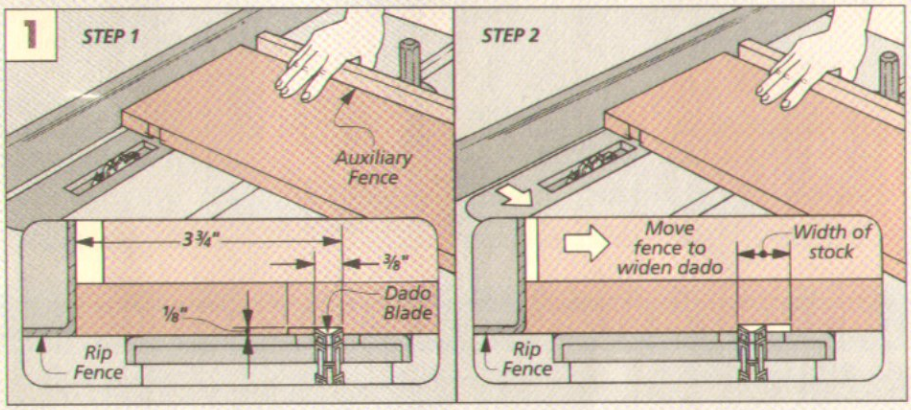

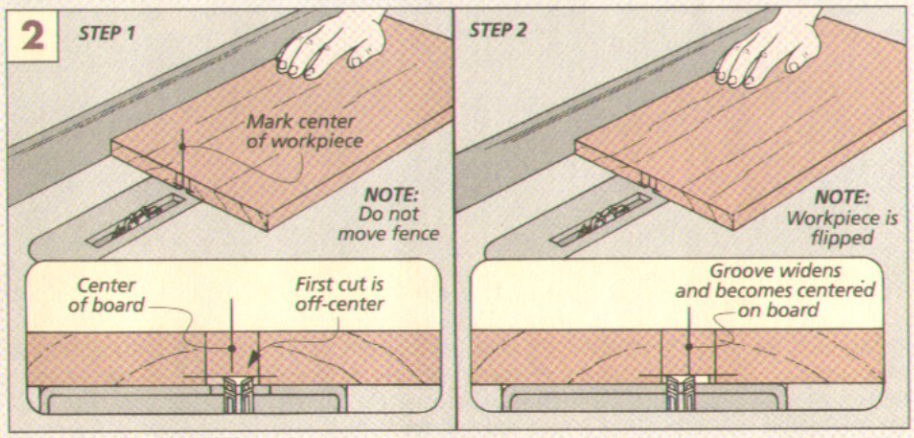

STRETCHER

With the legs and seat complete, the next step is to make the arched stretcher that fits between the legs.

DRY ASSEMBLE. I found it easiest to dry assemble the legs and the seat. Then an exact measurement for the stretcher can be taken. To do this, just measure between the grooves cut in the legs — making sure to include the depth of each groove. (For a tip on doing this accurately, see page 17.)

STRETCHER. When the **stretcher (C)** is cut to length, check its width against the height of each leg. The bottom of the stretcher should be flush with the arc on each leg, see Fig. 5. The best way to check this is to slide the stretcher into the grooves between the legs.

More than likely you're going to find that the stretcher and the arcs are not perfectly aligned. If they're not, you may have to rip the stretcher, or crosscut the *top* edge of each leg a little bit, see Details in Fig. 5. Either way, sneak up on the alignment.

ARC. Now an arc can be added to the stretcher. I added the arc for two reasons. One, it makes the bench appear lighter. And two, it creates a flat at each end of the stretcher that's similar to the feet on the legs.

To begin laying out the arc, I first attached the stretcher to the workbench with double-sided carpet tape, see Fig. 6. Shop Note: I use carpet tape quite a bit in the *Woodsmith* shop. It's great for temporarily holding parts together.

Next, I made a beam compass to help me lay out the arc. (For more on this shop-made compass, see Box at right.)

Then, to extend the pivot point off the workpiece, tape a piece of ¾"-thick scrap to the workbench. This also allows the compass to remain level as you're striking the arc. (I held this piece in place with carpet tape as well.)

When laying out the arc, allow for the amount of stretcher that's buried in the groove cut in each leg. You want to end up with two flats that are the same width as the feet once the Bench is assembled.

Once you're satisfied with the layout, cut the arc. To do this, I used the sabre saw. Then I sanded up to the layout line. Now the Bench is ready to be assembled.

BEAM COMPASS

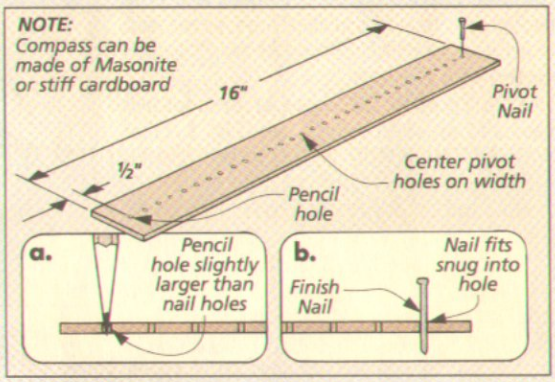

To make this beam compass, first cut a piece of ⅛"-thick Masonite to size. Then drill a series of pivot points, spaced ½", for a finishing nail. Now, at one end, drill a slightly larger hole for the head of a pencil.

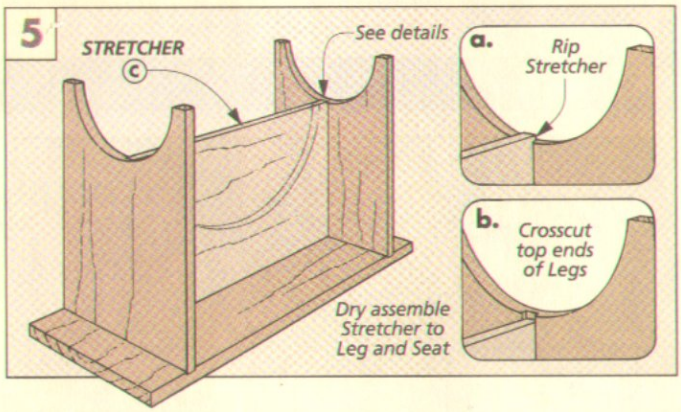

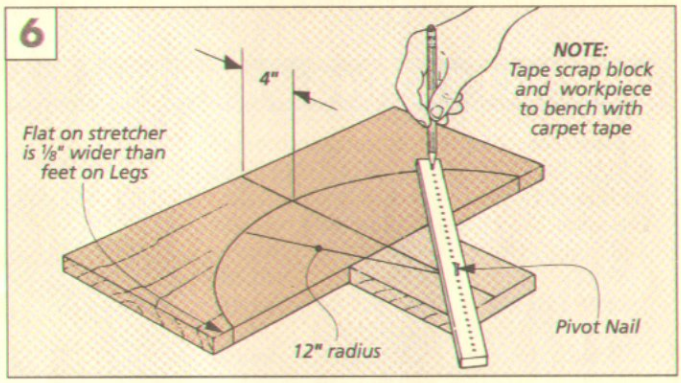

DRILLING & PLUGGING SCREW HOLES

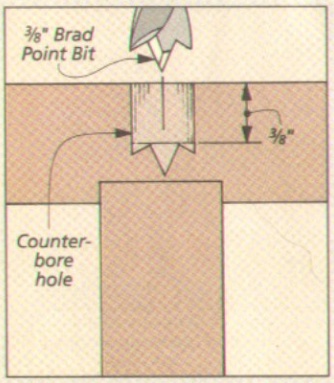

1 *To drill and plug holes for woodscrews, first drill a counterbore to accept the plug. Drill the hole about ⅜" deep.*

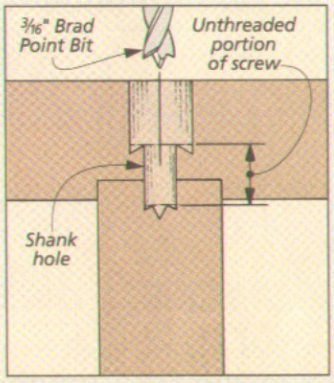

2 *Next, drill a hole to fit the shank of the screw. (The shank is between the threads and the head of the screw.)*

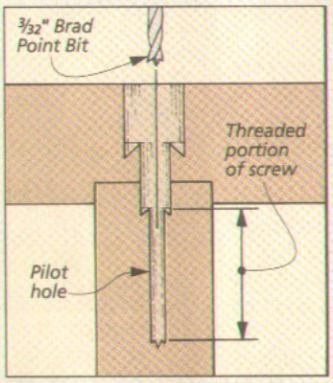

3 *To complete the drilling for a #8 woodscrew, drill a 3/32"-dia. pilot hole for the threaded portion of the screw.*

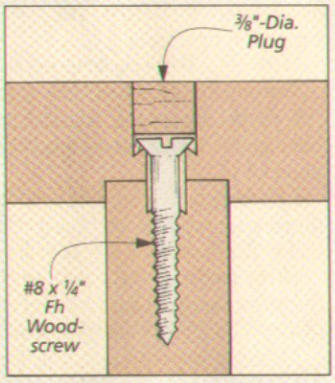

4 *After installing the screw, plug the hole. Once the glue dries, trim the plug flush with a chisel (refer to Details in Fig. 9).*

ASSEMBLY

The Shakers weren't afraid to use simple joinery when it was appropriate.

On a bench like this, it wasn't unusual for them to nail the parts together. But since nails don't hold as well as screws, I decided to screw the parts together. (The screws are then hidden with wood plugs.)

DRY CLAMP PARTS. Before screwing the Bench together, first dry clamp the parts together, see Fig. 7. Now, to hold the legs to the seat, lay out and drill the holes for the screws. Then glue and screw the legs to the seat. (For more on drilling and plugging screw holes, see Box at the bottom of the previous page.)

The next step is to lay out and drill the holes for the screws that hold the stretcher in place, see Figs. 8 and 9.

To avoid a gap between the stretcher and the seat, first glue and screw the stretcher to the seat. (This draws the stretcher up tight against the seat.) Now screw the legs to the stretcher. Shop Note: I *didn't* glue the stretcher to the legs. These parts must be allowed to expand and contract independently with the changes in humidity.

TRIM PLUGS. After all the screw holes have been plugged, the last step is to trim the plugs flush with the seat and legs.

To do this, I use a sharp chisel. The trick is to work the chisel around the plug, see Fig. 9. What you don't want to do is trim a plug flush with one whack on the chisel. If you do, you'll probably gouge the seat (or leg) or chip out the plug. So ease your way towards the center of each plug, working in slowly. (Once the Bench is sanded, the plug should be nearly invisible.)

After all the plugs are trimmed flush, sand the entire Bench. Then apply the finish. For more on the finishes I used, see Box below.

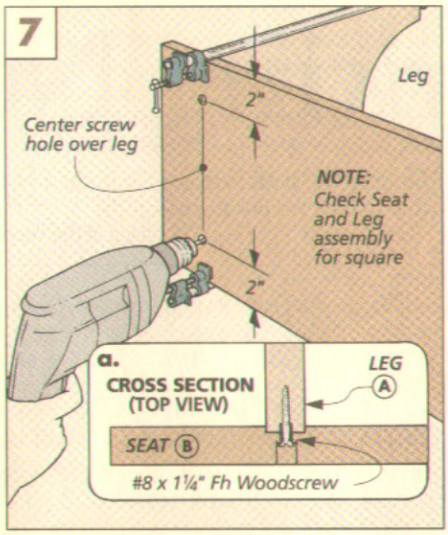

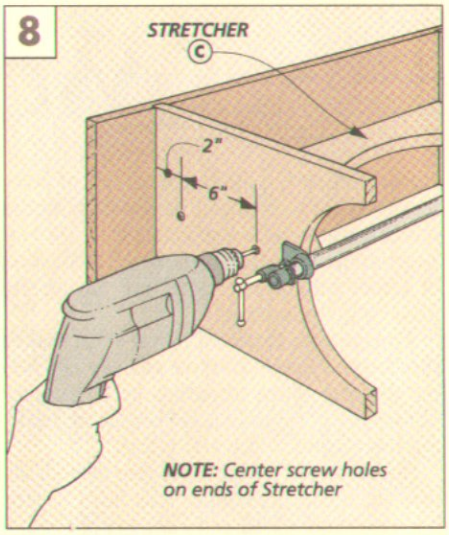

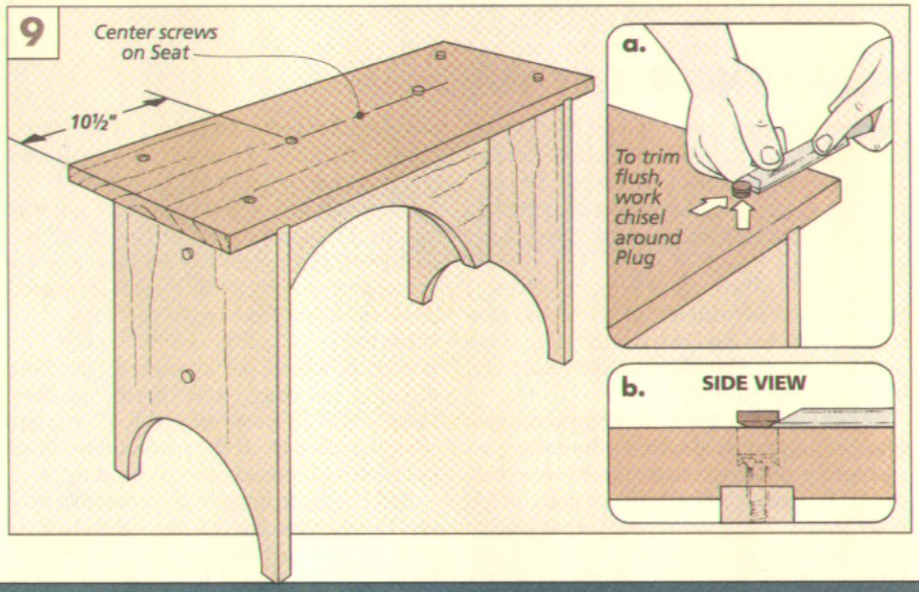

FINISHING THE SMALL SHAKER BENCH

For the stained version of the Bench (near photo), first I applied a coat of McCloskey's Stain Controller to help the wood absorb the stain evenly. Then, for the stain, I mixed equal parts of Minwax's Colonial Maple and Golden Oak. Finally, to protect the wood, I wiped on two coats of General Finishes' Royal Finish (satin). (For sources of these finishes, see page 31.)

On the painted version (far photo), I brushed on three coats of milk paint (barn red). There are two things I like about milk paint. It's easy to use, and it wears like iron. (In fact, about the only way to remove it once it's dry is with a power sander.)

After the milk paint dried, I gave the Bench an aged look by rubbing the finish lightly with a 3M Scotch Brite abrasive pad.

This Bench has a stain and an oil-based finish that allows the grain to show through. Prior to applying this finish, I sanded the entire Bench with 220-grit sandpaper.

This Bench is protected with three coats of milk paint. Before applying the paint, I roughed up the surface with 120-grit sandpaper. (This helps the milk paint stick better.)

Working Notes

I was working the other day on one of those projects that's especially rewarding. Not so much because of the project itself, or the way it turns out. More because of the satisfaction of actually doing the work and having the process go smoothly.

This got me thinking about what makes the "better" projects more rewarding. Better design? More attention to technique? Slower pace? Or just a good reason for building the project in the first place?

BIG PICTURE. There's not one correct answer to these questions. You have to step back and take a look at the bigger picture — the entire building process. What goes into planning, the steps to take while cutting, and what to look for during assembly.

So recently I put together a list of the ways I work. These are mostly things I take for granted and rarely have reason to discuss (except when talking to myself). It's the "between-the-lines" story of building a project.

This is the 'between-the-lines' story of building a project.

LIST TIME. I started my list with the basics. Use sharp tools. Take your time. Double check all measurements. The list was filling up quickly. But some of the tips sounded too specific to a particular project. So I edited the list and tried to organize it. It's not a list of *everything* I think about. Just those things that help me get more enjoyment — and more success — when building projects.

What follows is a discussion of some of the things on my list. In short, the procedures I follow in planning before I get into the shop. Plus, some methods of working in the shop that help give me good-looking projects — and a rewarding experience.

PLANNING & LAYOUT

The projects that turn out best all start out the same — with a good set of plans. But just as important is project *planning*. For me, this means building the project from start to finish without touching a piece of wood. Let me explain.

By building the project in my mind first, I become familiar with all the parts and how they fit together. So I can see the project being built in stages. Almost like watching someone else build it.

When planning, I'll be thinking about several things at once. Maybe it's the cutting sequence for different parts (rip first or crosscut?). Or how to cut the joints (tenons on the table saw or band saw?). And what special tools or jigs might help (a different router bit or a pattern made of Masonite?).

Planning helps me see problems before they happen. So I can avoid them because I've been "practicing" on them in advance.

SELECTING WOOD. After the project is fixed in my mind, it's easier to pick out the wood for the parts. So when I'm buying the lumber I'm not just looking for good boards — I'm trying to find my *project*.

For example, if the plans call for wide boards, I'll look for pieces of wood that will look good glued together. Similar color and grain patterns are important. Also, I buy about 20% more wood than the plans call for.

LAYING OUT. Laying out the boards for a project is a process of sorting, shuffling, marking, erasing, and again, planning ahead. With a piece of chalk I'll roughly sketch each part of the project directly on the pieces of lumber, see photo at right.

And I begin to imagine the assembly process. (Again, thinking two steps ahead.) If the focal point of the project will be a large panel, I'll lay out the board to balance the grain throughout the panel, see photos below.

This way of working may mean parts of some boards are wasted (for this project). But that's okay — it's the reason I bought extra wood in the first place.

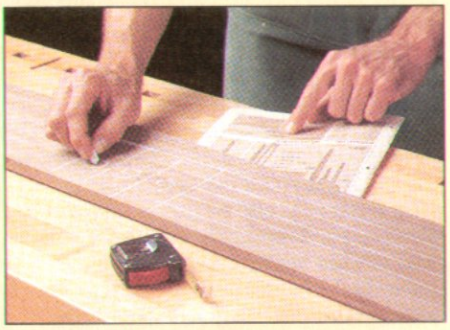

Lay out all the parts of the project on the boards in advance. It's easier to make changes before the wood has been cut.

PREPARING THE STOCK. All this planning usually gets me anxious to get started. But I don't just plunge in and cut all the pieces to finished size. First, I rough cut all the boards into smaller, manageable pieces along the chalk lines. Then I get on to the fun stuff — the finish cuts and the joinery.

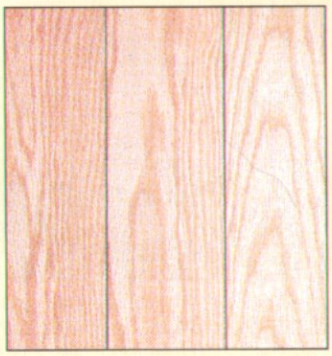

Boards to be edge glued can be arranged in several ways. Here the joint lines will be obvious.

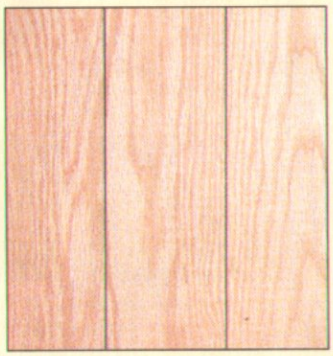

Arranged differently, the same boards combine to look like one. The joint lines will be less visible.

PLANNING & LAYOUT TIPS

- *Buy more wood than you'll need for the project*
- *Select boards for similar color and grain pattern*
- *Take time to match grain for glued-up panels*
- *Avoid mixing straight grain with wavy grain*
- *Use chalk to lay out parts on boards*
- *For best results, parts must be flat, edges square*

CUTTING THE WOOD

Planning continues even after the cutting begins. By this time I know where the cuts are going to be made and where the pieces go in the assembled project. But I don't start cutting just yet.

To avoid mistakes, there's a certain routine I follow. First, I label all the pieces and mark where the joints will be cut. Then I sort the pieces and make piles of similar parts. Parts for ripping to width. Parts for planing to a different thickness. Parts for cutting the same joint, such as a mortise and tenon.

BEGINNING TO CUT. Up until now I've been thinking several steps in advance. But now the hands take over, and the mind changes focus to what's taking place *right now*. Especially when a tool gets turned on.

To make cutting the pieces as accurate — and safe — as possible, I always rehearse the cut in my head first.

CONSISTENCY. Probably the most important thing to remember while cutting is consistency. And there are a couple things I do to ensure consistency. Whenever possible I try to cut all similar parts at one time. This goes for the joinery too. The fewer machine setups, the less chance for error, and the better the results.

TEST CUTS. Before the most critical cuts (a groove to accept a panel, a tenon to fit a mortise) I'll take an extra step — cut a "spare part" for making test cuts. This way, I can sneak up on the exact fit. (There's a scrap box in the corner of my shop for all these test pieces. I think of them as mistakes that never showed up on the project.)

CONTROL DEVICES. There's another thing I do to help achieve quality and consistency. I borrow ideas from production cabinet shops, using jigs and fixtures to make things go faster and produce identical parts, see drawing above. Usually fences, stop blocks, and patterns only take a little extra time to make. But they help a small shop put out consistent-quality projects.

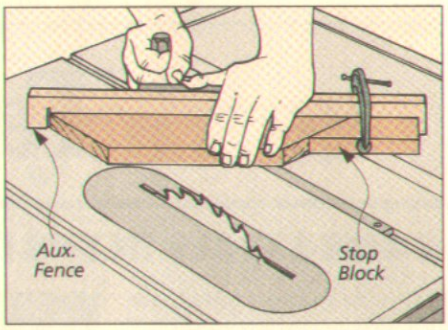

Get the most accurate cuts by using control devices. Here, a stop block helps produce mitered pieces all the same length.

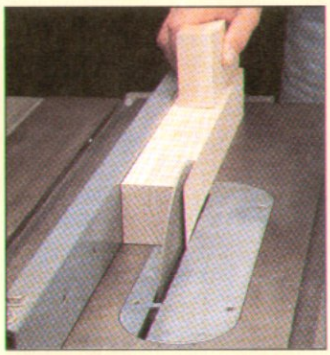

For many glued-up parts, it's important (for appearance) to keep the glue lines symmetrical.

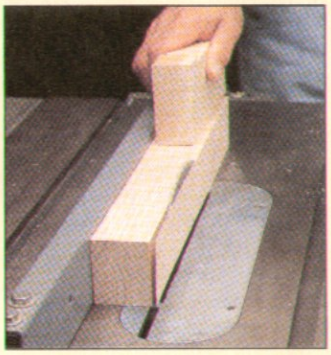

By cutting an equal amount from both sides, the glue lines will stay in the middle.

CUTTING TIPS

- *For consistency, machine all stock at one time*
- *For pieces to be joined, make extra for test cuts*
- *Use control devices for accuracy on critical cuts*
- *Make similar cuts on all pieces with same setup*
- *To keep glue lines symmetrical, make two cuts*
- *"Sneak up" when cutting parts to finished size*

ASSEMBLING THE PROJECT

Here's where the reward comes for extra planning and careful cutting. When the parts start coming together — and actually fit *the first time*.

But it doesn't always work out this way. More often, there's test fitting of mating parts and clamping up without glue. Assembling and planning (how to get this assembly perfectly square?). And maybe re-cutting to get the pieces to fit just right.

For many projects with a lot of sub-assemblies, I'll put together, take apart, trim a little, sand, and put the assembly back together. Maybe several times.

All this time I'll be using several different-size squares, a couple straightedges, maybe a shop-made measuring stick. There's a rag for wiping up glue squeeze-out and a chisel for hand-fitting joints. Plus clamps — big clamps and little clamps. And finally, I make sure I have all three of my hands ready.

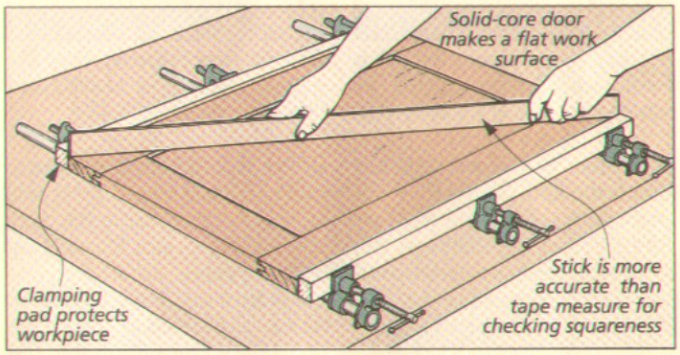

Three things can make assembling a project more accurate. Assemble on a flat surface. Protect the workpiece from heads of clamps. And measure across diagonals to check for square.

ASSEMBLY TIPS

- *Label parts before assembly — Top, Side, etc.*
- *Sand as much as possible before assembly*
- *Test joints for fit and square before gluing*
- *Spread glue in one thin, continuous film*
- *Use scrap blocks to distribute clamping pressure*
- *Use sanding block for final hand sanding*

Talking Shop

NOISE LEVELS IN THE SHOP

■ Hearing loss is an invisible injury. When I'm in the shop, I tend to be more concerned with keeping all my fingers and eyesight. But hearing loss *can* occur if your ears are not protected while in the shop.

Loss can occur regardless of the amount of time your ears are exposed to high noise levels — even if only for a few seconds.

CUMULATIVE LOSS. Hearing loss is cumulative. A little noise here and a little noise there adds up. And over a lifetime, even a few hours a week in a home shop can lead to some type of permanent loss.

After thinking about this, I decided to give OSHA a call to find out what they had to say about hearing protection. They consider noise levels below 85 decibels (dB) to be safe. Anyone experiencing noise over 85 dB (for *any* length of time) should use some type of hearing protection.

Once I knew this, I got to wondering how much noise is created in the *Woodsmith* shop. So I purchased a sound level meter to check our levels, see photo. (I knew our tools were loud, I just wasn't sure how loud.)

Recently we used a meter to check the noise level of the different tools in our shop. It showed the need for some kind of protection.

NOISE LEVELS. I expected the thickness planer and the radial arm saw to register the loudest noise. When cutting 6"-wide hard maple, each tool produced a noise level around 105 dB.

But I was surprised with the other tools. When routing an 1/8"-wide groove on our enclosed-base router table, a reading of 103 dB was registered with the doors closed. And with the doors open, the router table had a noise level of 106 dB. The table saw registered 104 dB.

However, the biggest surprise had to be the hand-held circular saw. It put out 110 dB while cutting 3/4"-thick plywood.

The only tools that didn't put out a dangerous level were the edge jointer, band saw, and drill press. (And the shop toilet — it spiked an 80 dB noise level.)

PROTECTORS. There are a number of protectors available to guard your hearing. Some go in your ears, others go over your ears. Most have a noise reduction rating (NRR) from about 21 dB to 33 dB. (For sources see page 31.) Using a protector with an NRR of 25 brings the noise level in our shop down to a safe 85 dB level.

I use foam plugs because they're inexpensive and they don't get in the way of my glasses. But "earmuff" style protectors aren't expensive either (they're also a little more comfortable over a longer period).

Which ones should you use? Whichever ones you *will* use. The point is this: you don't want the family sitting around yelling at you during some future Thanksgiving dinner.

WHY END GRAIN BURNS

■ *Why is it when I'm routing a board I'm more likely to burn the end of the board than the edge? And how can I avoid burn marks in the first place?*

Jim McKay
Nussloch, Germany

Wood burns when it gets too hot. And heat is caused by friction between the cutting tool (a router bit or saw blade) and the fibers in the wood.

CUTTING EFFORT. It all has to do with the amount of work the tool is trying to do — it takes more effort to cut across the grain than with the grain.

Think of a piece of celery — it's easier to tear it in half along it's length than it is to break it in half across the middle. It's the same with a piece of wood. When you cut or rout across the end, the tool is doing more work than if you were ripping the board into strips.

CLEAN & SHARP. Back to the other part of your question. There are several things you can do to reduce the chance of burning. First, always cut with a clean cutting edge. By this I mean it's free from pitch (gum) which can cause a hotter cut.

And the cutter should also be sharp. A sharp cutting edge slices the wood fibers, but a dull edge "mangles" the fibers. (That's why I'll choose a sharp paring knife over a butter knife anytime for chopping celery.)

FASTER FEED. Another thing you can do to avoid burning is to feed the workpiece quicker across the tool. But wait — you might think a *slow* rate would produce a cleaner cut. Maybe so. But there's a difference between a cut that *feels* clean and a cut that *looks* clean (with no burning).

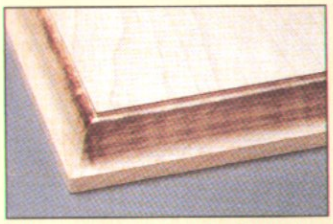

It's not uncommon to get a burn mark when cutting or routing the end of a workpiece.

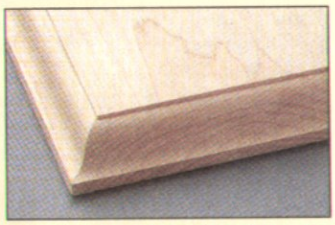

To minimize burning, keep the cutters clean and sharp, and feed the workpiece faster.

When you feed a workpiece into a cutter at a slow rate, the cutter is making more cuts in the same spot on the board. (More than it would at a faster rate.) This produces a great deal of heat because the cutter isn't just cutting — now it's rubbing or "burnishing" the wood.

Another solution would be to reduce the speed of the cutter. By slowing down the cutter, the amount of tool-to-wood contact is reduced. So there's less heat and less chance of burning.

Benchtop Plate Joiner

When **Jim Mitchell** of Jasper, Minnesota is joining small workpieces with biscuits, he first converts his plate joiner into a benchtop power tool. This way, the tool is clamped to the bench and the workpiece can be taken to the tool.

Jim's jig eliminates clamping or fastening down each individual workpiece to the bench before a slot can be cut. I liked his idea so much, I decided to build one for the shop.

CUSTOM-MADE JIG. To begin, get your plate joiner down off the shelf. What you're actually going to do is build the jig to fit *your* joiner.

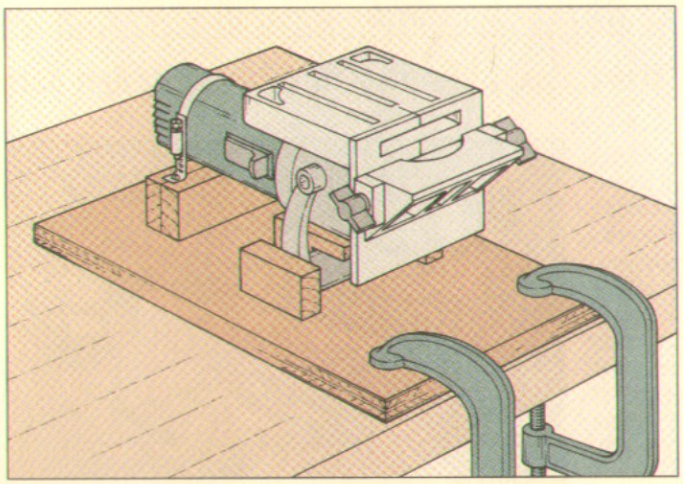

FEATURE YOUR JIG

If you've built an *original* jig and would like to see it featured on this page, send your idea to *Woodsmith*, Reader's Jig, 2200 Grand Avenue, Des Moines, IA 50312.

If we publish it, we will send you $100 and a complete set of *Woodsmith* back issues, with binders. (This set retails for over $300.) Include a sketch (or photo) of your jig and an explanation of how it's used. And *please* include a daytime phone number.

Since I have a Freud JS100 Plate Joiner, I built Jim's jig to fit it. But the plans shown here, with a few modifications, will work for other "barrel" type joiners. If your joiner isn't a barrel type, then you may have to come up with your own design based on the ideas shown here.

BUILDING THE JIG

To build the plate joiner jig, I cut the parts from hard maple and ¾"-thick plywood, see Fig. 1. I used plywood for the base, and hard maple for the other parts because it holds up so well.

BASE. To make the jig, start by cutting a base large enough to hold your plate joiner. (And make sure there's enough room to clamp the jig to your bench.) For my joiner, I cut the base 9" x 16".

SUPPORT BLOCK. Then, to prop up the barrel-shaped motor housing, cut a support block to fit below the housing.

The next step is to cut a hose clamp and screw it to the support block. For my joiner, I needed a 3¼"-dia. hose clamp. This 79¢ clamp (available at most hardware stores) is probably the best part of Jim's jig. It allows the plate joiner to be quickly and easily installed or removed.

Note: I actually went through two hose clamps. The first was cut too close to the clamp nut — this didn't allow enough room for me to screw the clamp to the support block. I cut the second clamp 1" below the nut — this worked out just fine.

HOOK & CLEATS. Then, to keep the plate joiner from sliding around on the base, screw an L-shaped hook and two side cleats to the base. When you're cutting the hook, cut it so it fits snugly over the handle.

USING THE JIG

After you've mounted the plate joiner in the jig, tighten down the hose clamp to hold the joiner in place. (Most hose clamps can be tightened with a screwdriver or pliers.) Note: Don't overtighten the clamp nut. You don't want to risk cracking the plastic motor housing on the joiner.

Once the plate joiner is in place, clamp the jig to the workbench.

CUTTING SLOTS. Cutting slots for biscuits with a stationary plate joiner is basically the same as it is when holding the joiner in your hands. The only difference is you're pushing the workpiece into the cutter rather than plunging the cutter into the workpiece.

To cut the slot, first draw a pencil line on your workpiece to indicate the center of the slot to be cut. Then align the indicator groove, located on the cutter shield, with the pencil mark, see Fig. 2.

Now, push the workpiece into the cutter. When the cutter bottoms out, the slot is complete. Safety Note: Keep the fingers on your left hand in front of the workpiece.

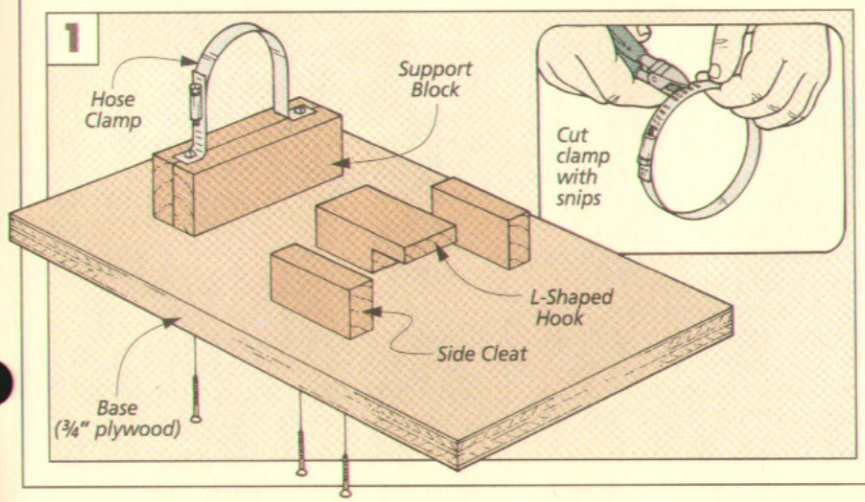

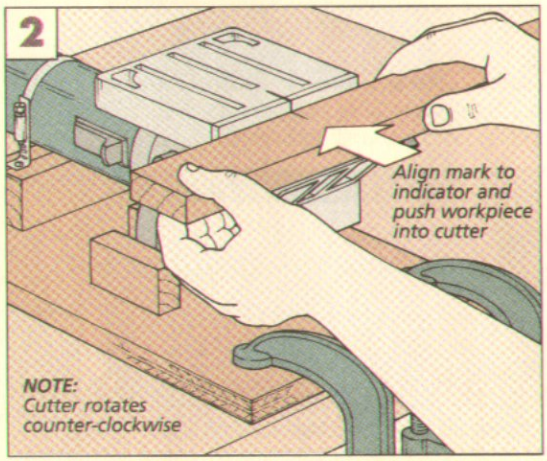

Tiled Coffee Table

Ceramic tile is a durable material for a table top. And when combined with wood, there's an unlimited number of design combinations.

Sometimes it pays to try something different. That's the way I felt about building this table. The idea was to combine a "non-wood" material (ceramic tile) in the table top with wood in the rest of the project. (The table shown at right is made from ash.)

Side-by-side, the tile and wood look good together. As the top for a table, ceramic tile can stand up to more abuse than most woods. And there are many combinations of wood and tile that can be used, see photos below. (We're including the steps to installing the ceramic tile in a box on page 30.)

OPEN MORTISE. Ceramic tile wasn't the only thing different I tried on this table. The joinery is a bit unique, too. What I wanted was a way of connecting the table's aprons to the legs. This is usually done with an open mortise and tenon joint. That's what I used, but I went about it differently. It's a technique you're not likely to find in many textbooks on woodworking.

Instead of drilling, then chopping the mortises, they're cut using the table saw. This makes them easier to cut than ordinary mortise and tenon joints. (Beginning on page 14 there's a separate article describing the technique for cutting open mortise and tenon joints on the table saw.)

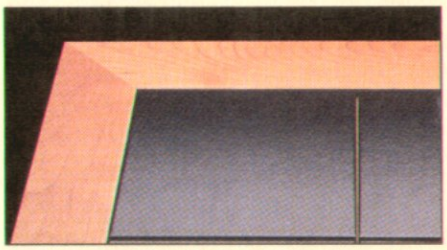

A Tiled Coffee Table can be built to fit any setting just by changing the tile or wood.

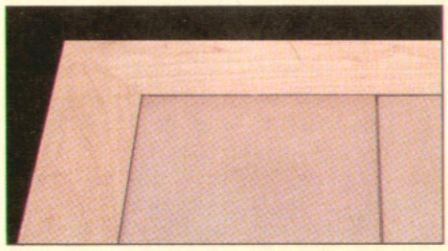

Ceramic tile can be selected to complement — or contrast with — the color of the wood.

ALTERNATIVE SHAPE

You can't please everyone all the time. When it comes to a coffee table, it seems that people have different ideas of the best dimensions. "It should be taller, wider, shorter ...". That's what I heard as I completed the square table above.

So I made a second table. Same design, same joinery, same height, just a different shape. The drawing at right shows what a rectangular table might look like. (There's a photo of this rectangular Tiled Coffee Table shown on page 32.)

NEW DIMENSIONS. To build a rectangular table, the plans don't change — only a couple of dimensions. And by starting with a different size piece of plywood, only two other parts are different. The new dimensions for the plywood base, the aprons, and the frame pieces are shown in the drawing above.

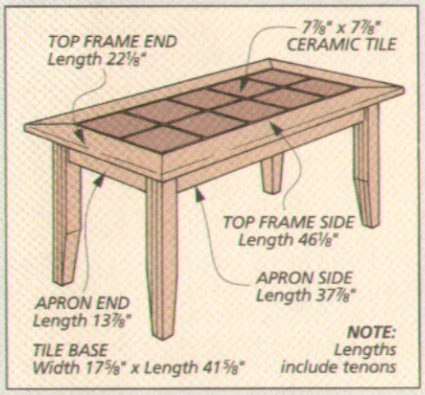

Note: To keep the changes to a minimum, I built the rectangular table using the same tile used for the square table.

EXPLODED VIEW

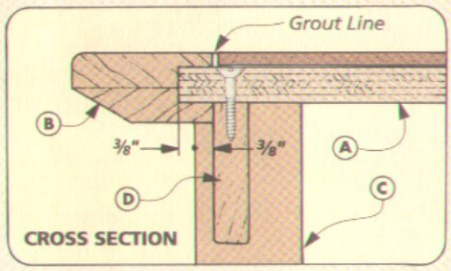

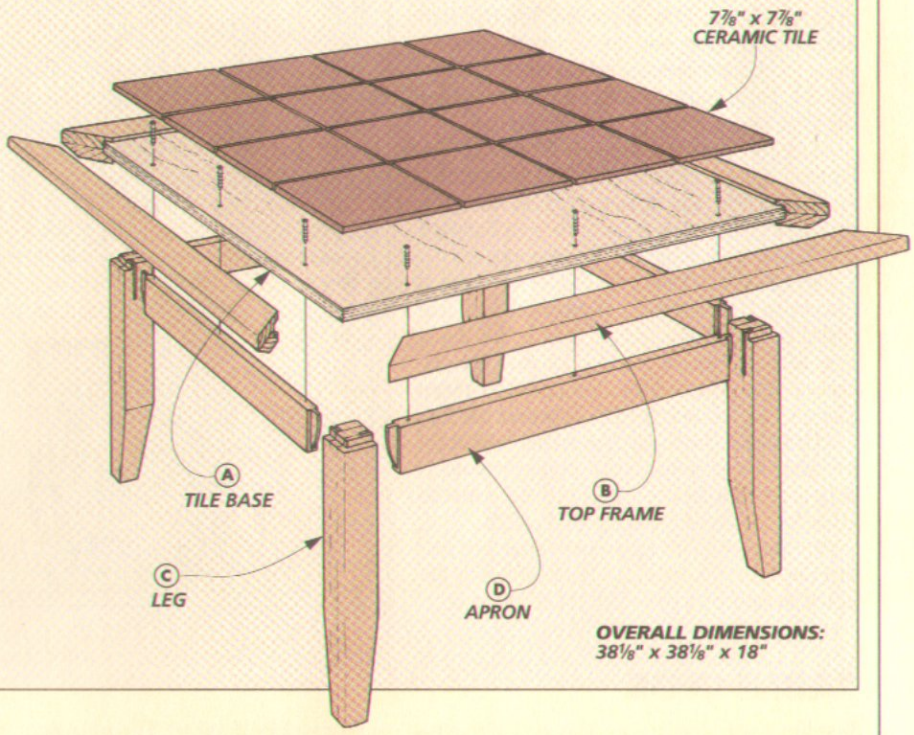

MATERIALS

WOOD PARTS

A	Tile Base (1)	3/4 Ply - 33 5/8 x 33 5/8
B	Top Frame (4)	1 1/2 x 3 – 38 1/8
C	Leg (4)	2 1/4 x 2 1/4 – 16 15/16
D	Apron (4)	3/4 x 3 – 29 7/8

SUPPLIES

- (12) #8 x 1 1/2 Fh Woodscrews
- (16) 7 7/8 x 7 7/8 x 5/16-thick Ceramic Tiles
- Adhesive, Grout, & Grout Sealer
- Satin Polyurethane Finish (Clear)

CUTTING DIAGRAM

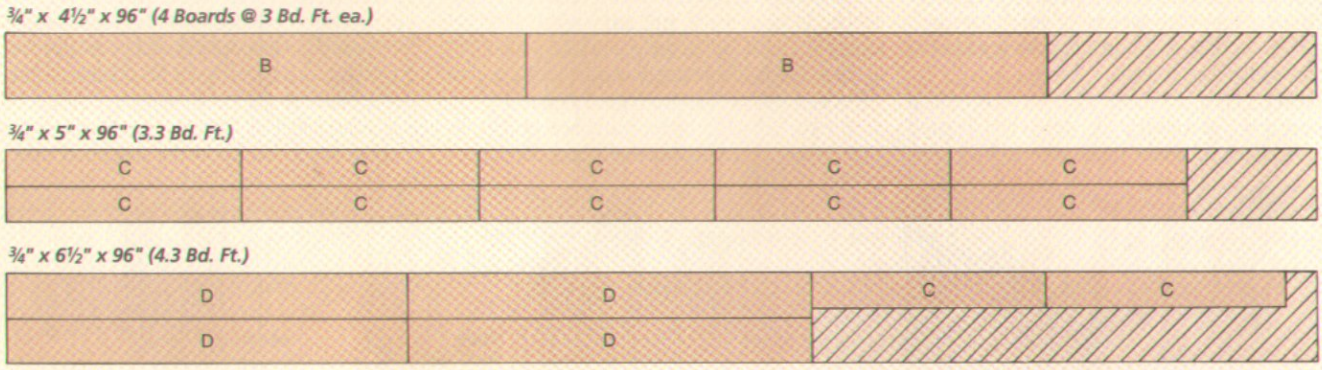

Also need one 4x4 sheet 3/4" plywood

TILE BASE

The critical part of this project is the tile. So I built the wood parts taking the size of the tile into consideration. (You should have the tile on hand before cutting the wood, see page 31.)

Start by measuring the tiles. (In my case they were 7 7/8" square.) The tile is glued to a piece of 3/4"-thick plywood. To determine the size of this base, calculate the total area the tiles occupy (be sure to include a 1/8"-wide grout line between them, see Fig. 1a).

Add to this area a 7/8"-wide border on all four sides (3/4" to form a tongue for the frame, plus a grout line between the frame and tile). Now, cut the **tile base (A)** to this size. Note: I used 3/4" A/C fir plywood.

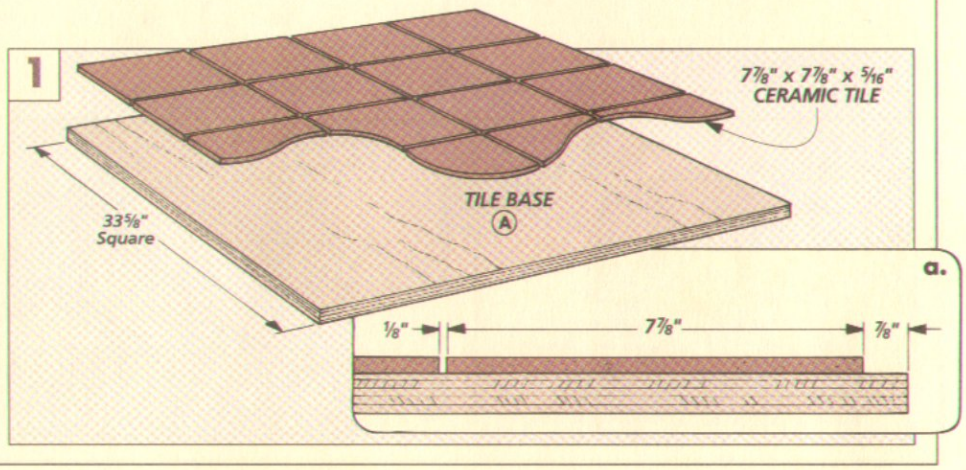

TOP FRAME

A wood frame around the tile base (A) covers the edges of the plywood like the bun around a hot dog, see the Cross Section on page 27. It also creates a border to contain the tile. To do both, the frame has to be thicker than the plywood and the tile combined.

GLUE UP. I started the **top frame (B)** by laminating two pieces of ¾"-thick stock for each piece of the frame. When the glue dried, I ripped each frame piece to finished width, see Fig. 2 and the tip on page 16.

CUT GROOVE. The frame pieces have a groove to fit around the plywood base. The width of the groove must match the thickness of the plywood, see Fig. 2a. *And* the distance of the groove from the top of the frame piece should match the thickness of the tile.

CUT BEVEL. To make the frame look thinner after it's attached around the plywood, I next ripped a bevel on the lower outside edge of the frame pieces, see Fig. 2b.

CUT MITERS. The frame isn't attached yet, but the frame pieces can be mitered to finished length now, see Fig. 2 and page 16.

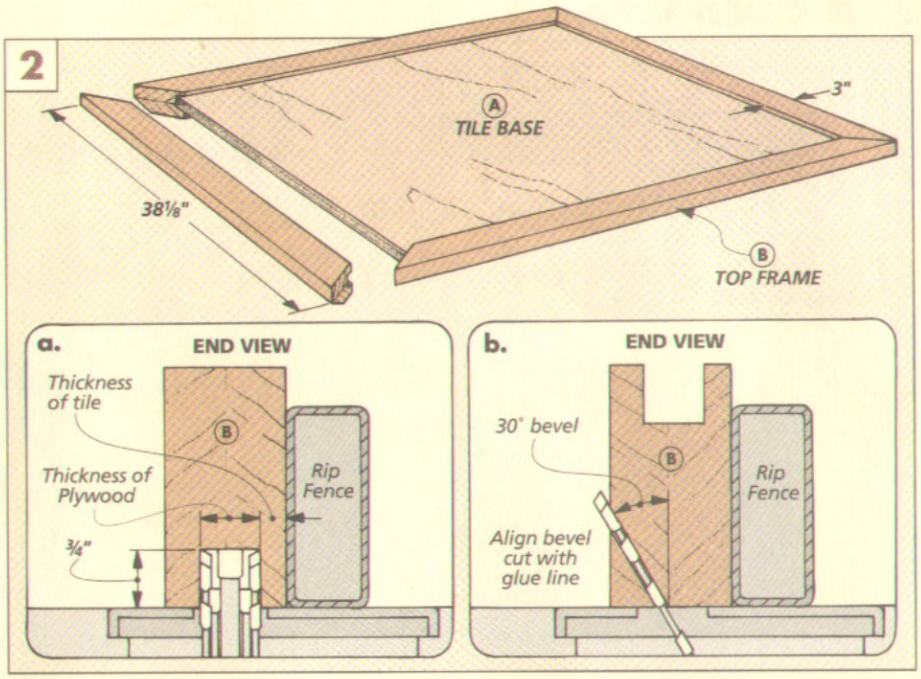

TABLE LEGS

Just like the frame pieces, the legs of this table are laminated from separate pieces of ¾"-thick stock, So that's where I began — by gluing up three pieces of stock for each **leg (C)**, see Fig. 3. Then I cut the legs to finished width and length.

LABEL LEGS. To keep the legs oriented properly while making the next cuts, I stood the legs up in their final assembled positions, see Fig. 4. Note: The glue lines on all the legs should face the same direction.

Next, lay out tapers and mortises on the inside face of each leg, and rabbets on the outside faces, see Figs. 4 and 4a.

MORTISES. Now mortises, rabbets, and tapers can be cut on the legs. I began by cutting two ¼"-wide open mortises on the inside faces at the top of each leg, see Fig. 5. (To cut the open mortises on the table saw, refer to the article on page 14.)

RABBETS. When the mortises have been cut on the inside faces of the legs, I cut rabbets on the two *outside* faces at the top of each leg, refer to Fig. 9. To do this, I used a dado blade in the table saw and an auxiliary fence attached to the rip fence, see Fig. 6.

TAPERS. Next, I cut the tapers at the bot-

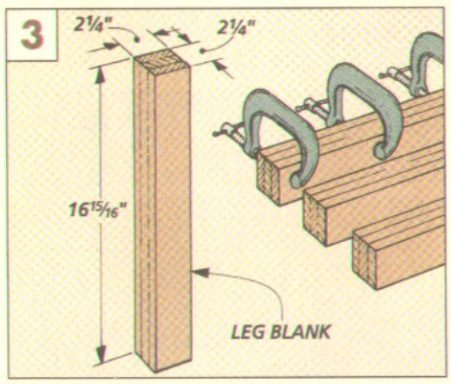

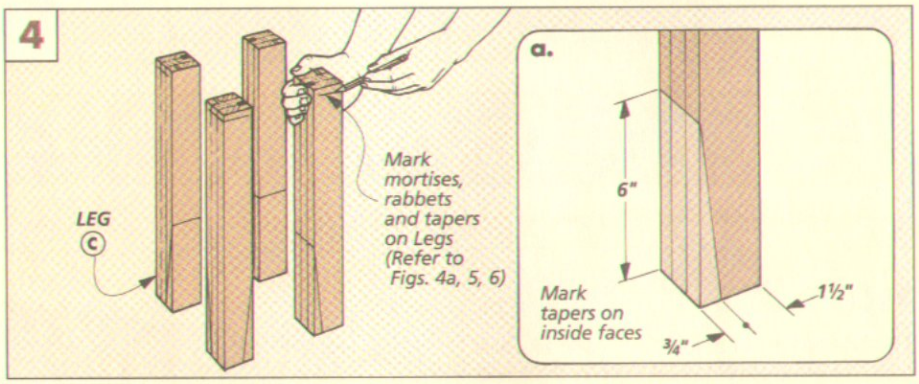

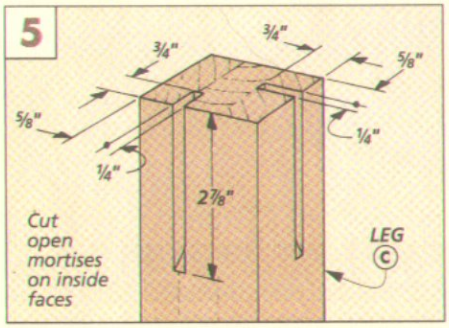

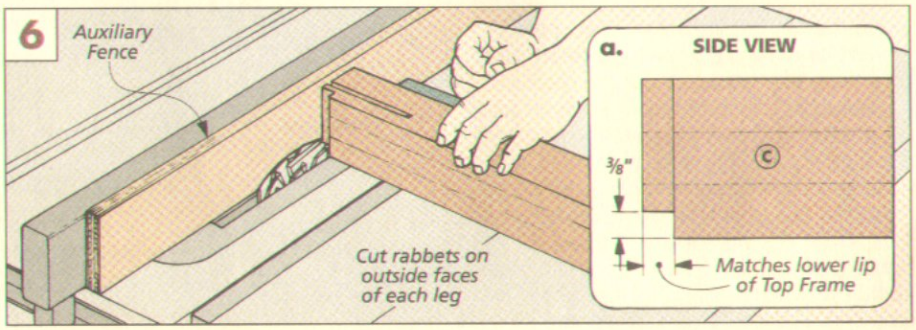

tom of each leg. To make this easy I built a simple jig designed especially for legs with this particular taper, see box at right.

After building the jig, the tapers can be cut. To do this, place the workpiece in the jig and align the saw blade with the layout mark, see Fig. 7. Then move the fence up to the jig and make the cut. To cut the second taper, just roll the workpiece 90°, see Fig. 8.

ROUNDOVERS. After cutting the tapers on all the legs, the last thing to do is rout a roundover on all the edges of the legs, see Fig. 9. Note: The roundover on the outside corner is routed with a ¼" round-over bit, but the others are ⅛" roundovers.

FIXED-ANGLE TAPER JIG

A fixed-angle taper jig can be set up quicker than an adjustable taper jig. It's also simpler to make — there are no moving parts.

The taper jig starts out as a piece of scrap that's tapered to the desired angle (7½° for the table legs), see drawing. I cut this taper on the band saw, then sanded the tapered edge smooth. (When used, this is the edge that runs against the table saw rip fence.)

A short cleat screwed to the front of the jig holds the end of the workpiece in position during the cut, refer to Fig. 7 below.

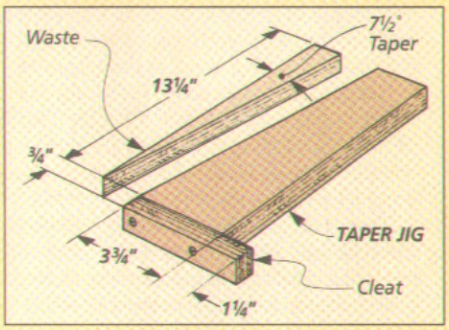

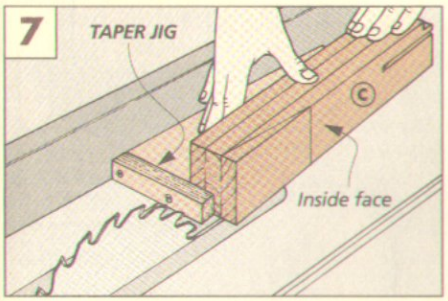

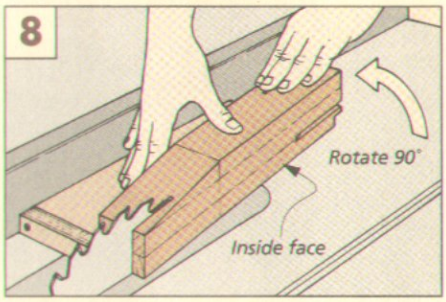

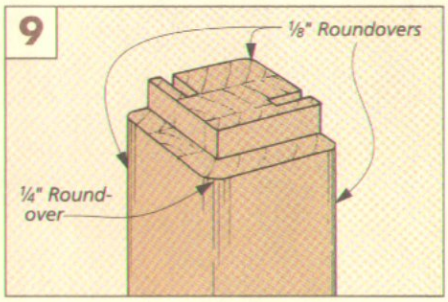

APRONS

The legs of the table are connected by aprons with tenons on the ends. The aprons determine the size of the leg assembly.

RIP TO WIDTH. Start the **aprons (D)** by ripping four pieces of stock to the same width, see Fig. 10.

To determine the length of the aprons, a little arithmetic is needed, see Fig. 11. It's a relationship between the plywood base, how much the base overhangs the legs, and the size of the legs. This may sound a little confusing, but it's all shown in Fig. 11.

CUT TENONS. When the aprons have been cut to the correct length, tenons can be cut on the ends of each apron to fit the mortises.

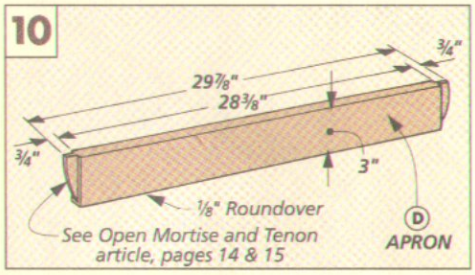

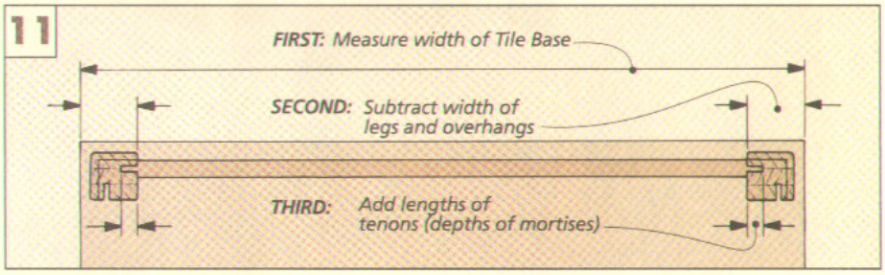

ASSEMBLY

At this point the base of the table is ready to be assembled. But first, I dry-fit the aprons between the legs to check for square. Then center the plywood base on top and measure the overhang (it should be ¾" all around).

To assemble the aprons and legs, I started by gluing up one sub-assembly at a time. (One apron and two legs.) Shop Note: To keep the clamping pressure centered over the joint, I placed a length of dowel between the clamp and the leg, see Fig. 12a.

Finally, the last two aprons can be glued between the two sub-assemblies. Then check for square again by measuring the diagonals between the legs.

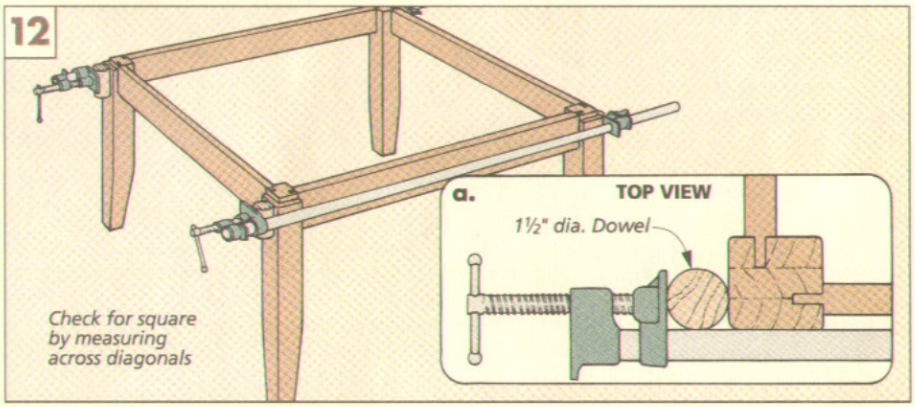

ASSEMBLING THE TOP & LEGS

Here's when all the parts are assembled and they begin to look like a table. The plywood base is screwed to the leg assembly, then the frame is added around the plywood.

LAY OUT SCREW HOLES. To locate the position of the screw holes for attaching the plywood to the aprons, first place the plywood on the leg assembly with an even overhang all around, see Fig. 13.

Next, temporarily clamp the plywood to the base and draw a pencil line around the top of the plywood to indicate the centerline of the aprons below. (On my table this line is 1⅛" in from the edge of the plywood.)

Now the countersunk screw holes can be drilled along the pencil line, through the plywood and into the aprons. Then screw the plywood to the leg assembly.

ATTACH FRAME. When the plywood has been attached to the leg assembly, the frame pieces can be glued around the plywood, see Fig. 14.

Shop Note: As with any mitered frame, it can be tricky keeping the miters closed while the frame is glued around the plywood panel. To make this easier, I used several sets of clamps. First, a band clamp around the outside of the frame, see Fig. 14. Then a C-clamp across the corners to keep the miters flush. And a couple of pipe clamps may be needed across the middle of the frame pieces to hold them tight to the plywood.

ROUND OVER EDGES. All that's left before installing the tile is to rout a ¼" roundover around the top outside edge of the attached frame, see Fig. 14a.

FINISH. It's easier to finish the wood parts of this table before the ceramic tile is installed. Then the top can be tiled.

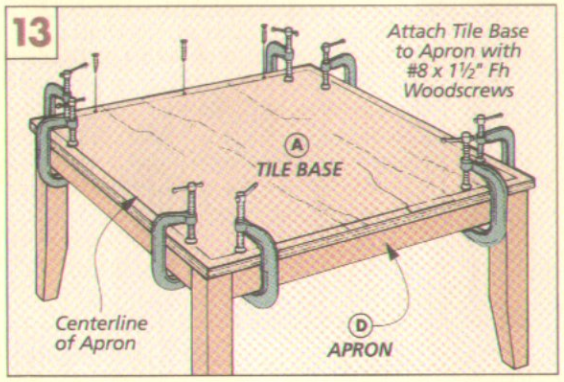

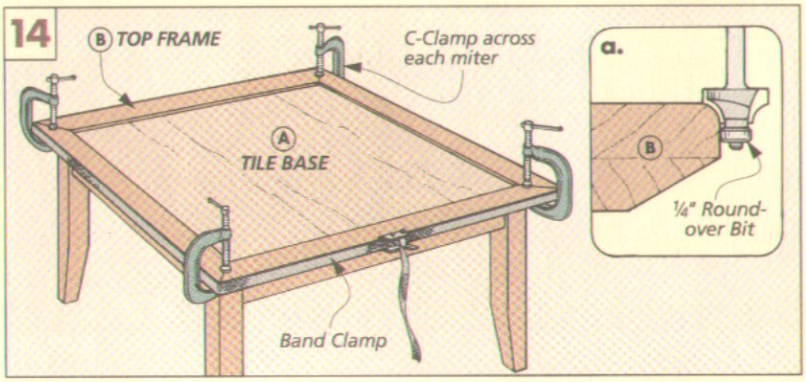

INSTALLING CERAMIC TILE

The biggest challenge in many tile jobs is fitting and cutting the tile. But for this project that's not needed — the plywood base was cut to fit the tile. All that's needed is to glue the tile to the plywood, apply grout, and seal.

FINISH THE WOOD. Applying finish is usually the last part of a project. But to protect the wood on this Coffee Table from the messy glue, grout, and sealer, I applied the finish before tiling.

I used three coats of satin polyurethane to finish the table. Then, after the last coat of finish dried, I used masking tape to mask off the wood frame.

INSTALLING TILE. Now the adhesive can be spread onto the plywood. Note: I bought all the supplies for installing tile at the store where I purchased the tile, see Sources on page 31. Then I followed the instructions provided with the supplies.

APPLY SEALER. Finally, to protect the grout from spills and stains, I applied a coat of grout sealer between the tiles. Then the masking tape can be removed.

1 *The wood frame should be finished (and dry) before beginning to tile. This table has three coats of polyurethane.*

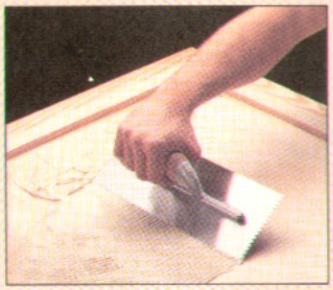

2 *Adhesive is applied directly to the plywood base. A notched trowel helps spread the adhesive for a good bond.*

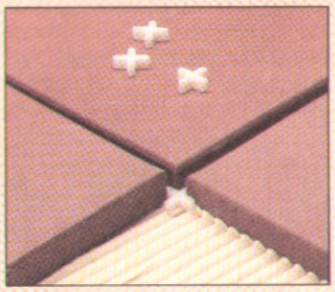

3 *To maintain an even ⅛" gap between tiles, plastic spacers are used. They can be left in place and buried under the grout.*

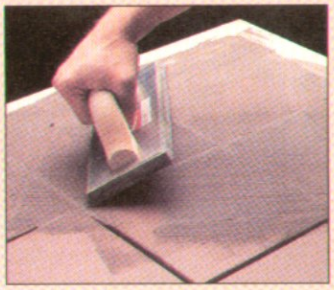

4 *After the adhesive has cured, grout is applied. A rubber float forces the grout into the gaps between the tiles.*

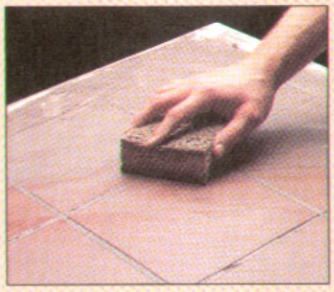

5 *The grout must be sponged off the tile before it becomes too hard. Rinse the sponge often in clean water.*

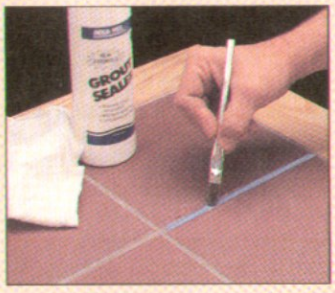

6 *Finally, the grout lines can be sealed with a water-based grout sealer. The tile itself doesn't have to be sealed.*

Sources

TOOL CABINET

A complete hardware kit for the Tool Cabinet, shown on page 6, is available from *Woodsmith Project Supplies*. This kit has all the screws, washers, and hardware you'll need, including the following:

- (1 pair) 16" Full Extension Drawer Slides
- (4) Maple D-Handle Wire Pulls with Screws
- (1) Hardwood Dowel, ¼" x 28"
- (3) Piano Hinges, 1½" x 36"
- (5) Magnetic Barrel Catches with Strike Plates

W91-791-100 Tool Cabinet Hardware Kit $47.95

SMALL SHAKER BENCH

There isn't any special hardware needed for the Small Shaker Bench on page 18. Hardwood plugs and plug cutters are available from the sources below.

TILED COFFEE TABLE

The Tiled Coffee Table, shown on page 26, also doesn't require any special hardware. But before building it, be sure to have your tile and supplies on hand.

Tiles and tiling supplies are available at Color Tile, a national chain. But supplies are also available from local retailers and home improvement centers.

Tiles are ordered by size and color. I used 8"-square tile for the coffee tables in this issue. (This size is only nominal — the tiles may actually be a bit smaller.) But you can choose almost any size tile and adjust the size of the table.

Tiles will also vary in color (and colors go in and out of style). The tiles used for the coffee tables shown in this issue have the following order numbers and manufacturers. (Call or write the manufacturers to find a local retailer.)

- Ironrock Mt. 310 9310C (shown on page 26)
  Metropolitan Ceramics
  P.O. Box 9240
  Canton, OH 44707
  216–484–4887

Note: I used taupe-colored wall grout with these tiles.

- #8457 Vento Jade (page 32)
  Florida Tile
  P.O. Box 447
  Lakeland, Fl 33802
  800–352–8453

Note: I used gray-colored wall grout with these tiles.

To lay the tile, I used the following supplies and tools:

- Adhesive for Ceramic Wall & Floor Tile
- Tile Grout & Acrylic Additive
- Grout Sealer
- ⅛" Tile Spacers
- Notched Trowel
- Rubber Float
- Sponge, Cheesecloth, or Burlap (for wiping off dried grout)

One more thing about tiling supplies. Though the tiles and tools can be purchased individually, some of the supplies come in large quantities. So for the Tiled Coffee Table, you'll probably only use a small portion of them. Unless, of course, you can find a wall or floor to tile as well.

FINISHES

To protect the Tiled Coffee Table, I brushed on three coats of satin polyurethane. Polyurethane is available at local retail stores and also through the catalogs listed below.

WIPING VARNISH. I gave the Tool Cabinet two coats of a wiping varnish — General Finishes' Royal Finish.

W91-4003-602 Royal Finish Top Coat (Satin) ... $11.95 quart

STAIN. I built two of the Small Shaker Benches and finished each one differently, see page 21. The first Bench is stained with a 50/50 mixture of Minwax's Colonial Maple and Golden Oak. Minwax products are available through retail stores and the catalog below.

But before staining, I started with a coat of sealer to help the pine absorb the stain evenly. After staining, I applied two coats of a wiping varnish, see above.

W91-4003-321 McCloskey's Stain Controller & Sealer ..... $5.95 pint

MILK PAINT. The other Bench is finished with Barn Red Milk Paint. *Woodsmith Project Supplies* is offering Milk Paint in a variety of colors. (For additional colors, see the catalogs below.) Each bag of powder will mix up a pint of paint that covers about 50 square feet.

W91-4001- Milk Paint
342 Bayberry (Green)..... $7.95
343 Oyster White..... $7.95
344 Barn Red $7.95
345 Soldier Blue $7.95
346 Lexington Green $7.95

ROUTER BITS

To cut grooves for splined miters, I use a router with a slot cutter bit, see page 16. *Woodsmith Project Supplies* is offering a slot cutter bit that cuts a ¼"-wide kerf with three cutting "wings." (Note: This bit is only available with a ¼" shank.)

W91-1514-714 ¼" Slot Cutter Bit..... $19.95

HEARING PROTECTION

In Talking Shop on page 24, we discussed two types of hearing protectors — foam plugs and ear "muffs." Both should be available at local home improvement centers. Ear muffs are also available through the catalogs below.

Note: To test the noise levels in the shop, I purchased a noise level meter at a local Radio Shack for about $60.

WOODSMITH PROJECT SUPPLIES

ORDER BY MAIL

To order by mail, use the order form that comes with the current issue. The order form includes information on sales tax as well as shipping and handling charges.

If the mail order form is not available, please call our Toll Free number at the right for more information on specific charges and any applicable sales tax.

ORDER BY PHONE

For fastest service use our Toll Free order line. Open Monday through Friday, 7 AM to 7 PM Central Time.

Before calling, please have your VISA, MasterCard, or Discover Card ready.

1-800-444-7527

Note: Prices subject to change after April, 1994.

MAIL ORDER SOURCES

Similar hardware and supplies may be found in the following catalogs. Please call each company for a catalog or information.

Constantine's
800–223–8087
Drawer Slides, Piano Hinges, Hearing Protectors, Milk Paint, Plugs & Plug Cutters

Woodcraft
800–225–1153
Drawer Slides, Piano Hinges, Slot Cutter Bit, Plugs & Plug Cutters, Hearing Protectors

The Old-Fashioned Milk Paint Company
508–448–6336
Milk Paint

Craftsman Wood Service
800–543–9367
Plugs & Plug Cutters, Polyurethane, Minwax Finishes

Woodworker's Supply
800–645–9292
Drawer Pulls & Slides, Piano Hinges, Plugs & Plug Cutters, Hearing Protectors, Polyurethane, Slot Cutter Bit

The Woodworkers' Store
800–279–4441
Drawer Slides, Magnetic Catches, Piano Hinges, Plugs & Plug Cutters, Hearing Protectors, General Finishes, Polyurethane, Slot Cutter Bit

Woodworking Unlimited
800–543–7586
Piano Hinges, Magnetic Catches, Plugs & Plug Cutters, Hearing Protectors, Polyurethane, Slot Cutter Bit

Final Details

Tool Cabinet

▲ *The top of this Tool Cabinet is as roomy as a closet. Inside, adjustable shelves keep portable power tools and supplies separate, yet organized. The best part of the cabinet is the doors — all three of them. Together with custom-built hangers, they add almost 18 square feet of storage for hand tools. To build this Tool Cabinet, see page 6.*

Small Shaker Bench

▲ *One long piece of pine is cut, joined, and then painted to produce this sturdy, useful bench. But it looks just as good stained. Step-by-step instructions for building the bench begin on page 18.*

Tiled Coffee Table

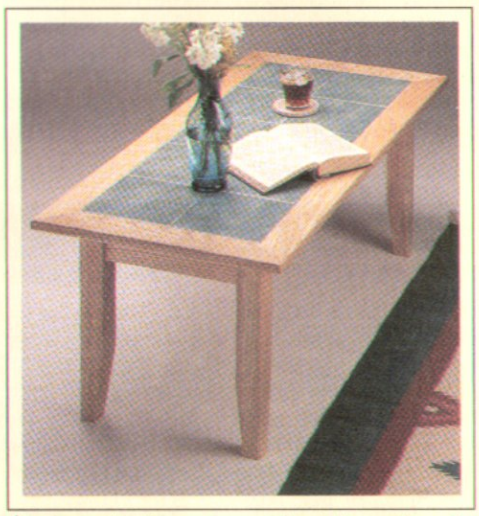

▲ *Ceramic tile makes a durable surface for the top of a hardwood coffee table. To build this table — or a square version — see page 26.*